LE-812-3 / 816
Electrodynamic Shakers

The SignalForce® LE-800 Series are proven, high performance shakers, employing a double ended field structure to provide maximum flux density in the central gap for higher efficiency, higher force to current ratio and lower stray magnetic field above the armature surface. The armatures are rugged magnesium castings, which are centered and guided by the high performance flexures and a very stiff bearing. Air-cooling is via remote blower, minimizing noise and heat in and around the shaker test area.

Standard Features

- Peak Sine Force: 8000 lbf (35.6 kN)
- Random Force rms: 8000 lbf (35.6 kN)
- Velocity Peak: 71 in/sec. (1.8 m/sec)
- Armature diameters: 13.25 inch (337 mm) and 17.25 inch (440 mm)
- Automatic armature centering

Options

- Economy field supply
- Vertical isolation mounts (VI)
- Air isolated trunnions with Lin-E-Air low frequency isolation (VH)
- Air glides
- Guidance systems
- Chamber interfaces
- Monobase systems for sequential three axis testing
- Slip tables

Typical Applications

- Electronic components
- Aerospace
- Automotive

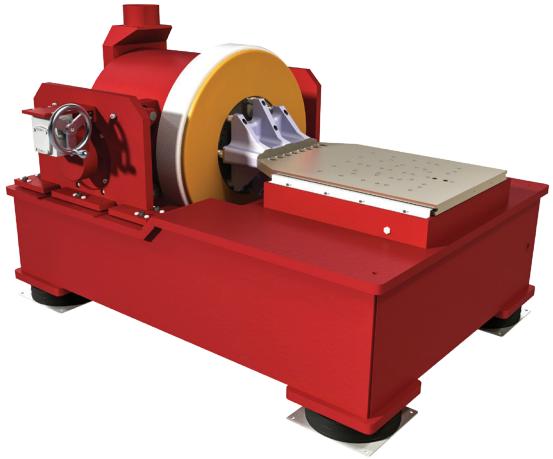

Sine Performance Envelopes

LE-812-3 / DSA 15-4

Bare table = ■ 125 lbs (56.7 kg) load = ■

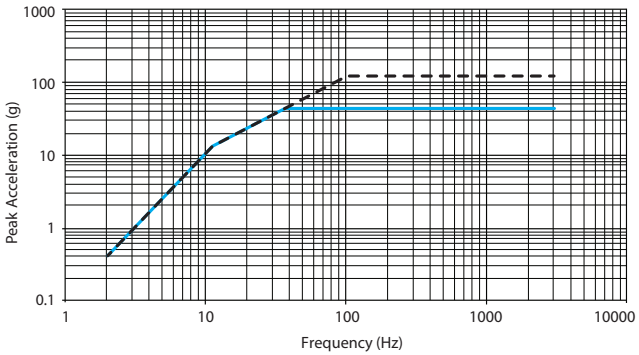

LE-816 / DSA 15-5

Bare table = ■ 200 lbs (90.7 kg) load = ■

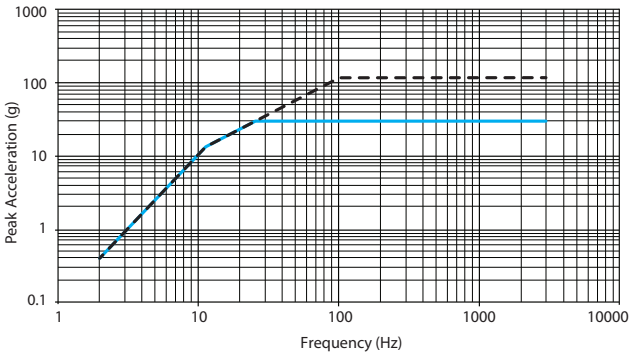

LE-812-3 / 816
Electrodynamic Shakers

LE-812-3 / DSA15-4 LE-816 / DSA15-5

	Maximum Sine Force		Maximum Random Force		Maximum Shock Force		Armature Mass		Armature Diameter		Maximum Acceleration (bare table)		Maximum Velocity		Displacement Peak to Peak		Frequency Range	Armature Axial Resonance	Armature Suspension	Static Load Support		Stray Magnetic Field		Heat Dissipation (kW)			Facility Power Requirements*	Uncrated Shaker Mass	
	lbf	kN	lbf	kN	lbf	kN	lbs	kg	in	mm	g	m/s²	ips	m/s	in	mm	Hz	Hz	Type	lbs	kg	gauss	mT	Shaker	Amplifier	Blower	kVA	lbs	kg
LE-812-3 / DSA15-4	8000	35.6	8000	35.6	17600	78.3	50	23	13.25	337	120	1177	71	1.8	3	76.2	5-3000	2350	Half loop beryllium copper	1000	454	< 5	.5	13.5	6.6	1.35	55	6500	2950
LE-816 / DSA15-5	8000	35.6	8000	35.6	17600	78.3	70	32	17.3	440	114	1118	71	1.8	2	50.8	5-3000	2100	Flat composite	1000	454	< 5	.5	13.5	6.6	1.35	55	6500	2950

* kVA based on power draw to run full capacity of shaker – not amplifier capacity.

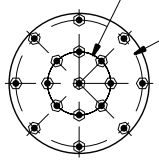

812 ARMATURE TABLE INSERT PATTERN

3/8-16 UNC-3B REPLACEABLE SS INSERTS STANDARD

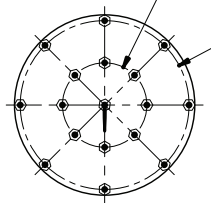

816 ARMATURE TABLE INSERT PATTERN

Note: LE-816 recommended for use in VI configuration.

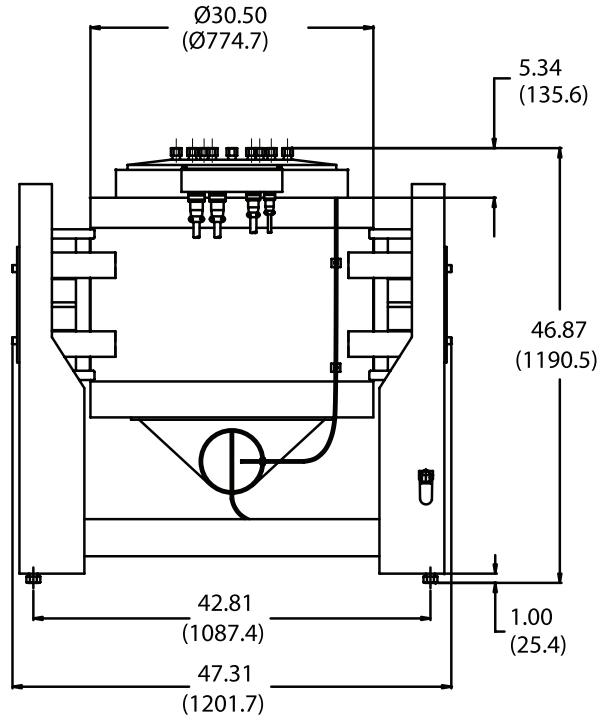

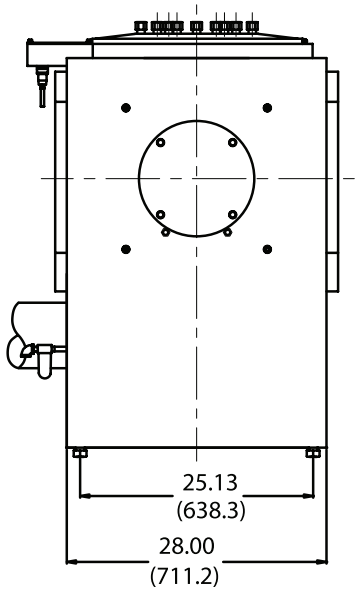

Environmental Characteristics

Ambient Working Temperature Range	
Shaker	+40F to +100F (+4C to +38C)
Amplifier	+32F to +104F (+0C to +40C)
Heat Dissipation	
Shaker	13.5 kW
Amplifier*	5.3 kW (4 Module) 6.6 kW (5 Module)
Blower	1.35 kW
Acoustic Noise @ 1m	
Shaker	108 dBA
Amplifier	75 dBA
Blower	75 dBA with silencer
Humidity	
Shaker	<95% non-condensing
Amplifier	<95% non-condensing
Facility Requirements	
Blower cooling air flow	1700 CFM (48.14 m3/min)
Amplifer cooling air flow*	920 CFM (26.1 m3/min) (4 Module) 1150 CFM (32.6 m3/min) (5 Module)
Compressed air supply	1 CFM at 90 psi (0.03 m3/min at 6.2 Bar)
Power supply range	208 – 480 VAC, (3) phase
Total electrical requirements	See table

Amplifier Characteristics

Rated Power*	60 kVA (4 Module) 75 kVA (5 Module)
Efficiency	95%
Switching Frequency	50 kHz
Input Impedance	1.5 V rms for full output (10 K ohm input impedance)
Voltage Output	200 V rms
Current Output*	332 A rms (4 Module) 415 A rms (5 Module)
Distortion	(at rated output) THD < 0.5% from DC to 1500 Hz 0.75% from 1500 to 2000 Hz 1.0% from 2000 to 3000 Hz
Noise & Hum	> 70 dB below full output, with shorted input
Weight*	820 lbs (373 kg) (4 Module) 855 lbs (389 kg) (5 Module)

Amplifier Dimensions

Height	68.5 in	(1740 mm)
Width	22 in	(559 mm)
Depth	50.5 in	(1283 mm)

Blower Dimensions

Height	41.5 in	(1054 mm)
Width	22.1 in	(561 mm)
Depth	50.5 in	(1283 mm)

EMI shielded console, air cooled screens, and 3-phase line filtering standard.
* Multiple listing reflects amplifier models – small to large.

Performance Notes

1. Random force rating based on flat spectrum from 20–2000 Hz, with 100 lbs (45.4 kg) non-resonant load. Ratings comply or exceed ISO 5344. For the LE-816 the random rating is based on a 140 lbs (63.5 kg) non-resonant load.
2. Shock pulses will yield different performance characteristics based on duration of the pulse. Consult application specialist to evaluate specific shock pulses.
3. Heavy payloads may reduce available pk-pk displacement.
4. Stray magnetic field measured at full field 6 inches (152.4 mm) above armature table.
5. Shaker weight is variable based on mounting configuration.
6. At maximum force bare table. Acoustic noise from a test will depend on test load and profiles run.
7. Wet bulb temp not to exceed 80° F (27° C).

Specifications are subject to change without notice.