COTTO
eHOME

VAN XẢ BÀN CẦU CT440XNS
Top inlet, Xả kép 2.5L/4L
Chất liệu: Đồng mạ crom

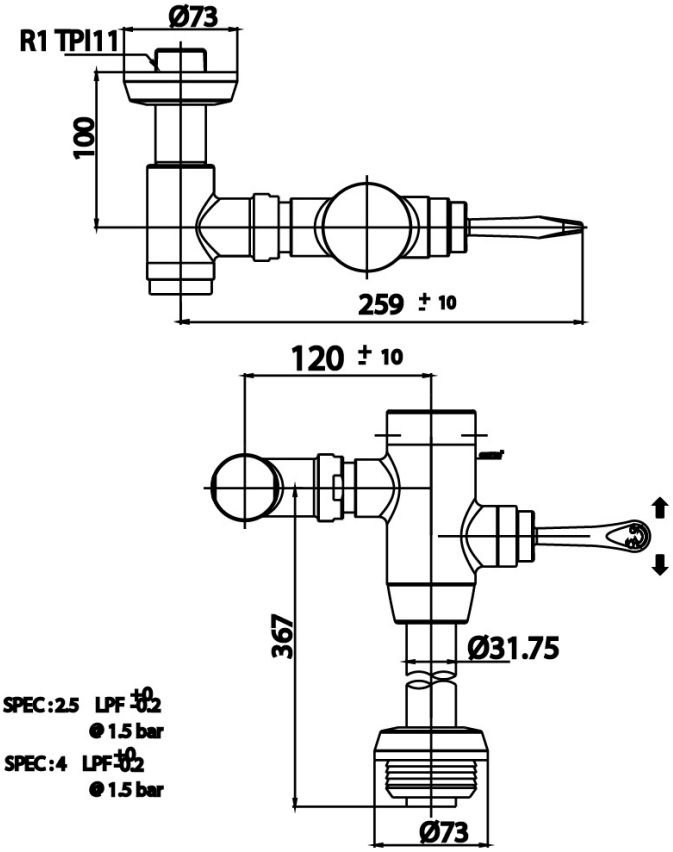

Đồ Đẹp Nhà Sang
beautiful things for beautiful houses
Showroom COTTO: 18A Ngo Tat To, Van Mieu - Cat Linh, Ha noi
Head Office: 18A Ngo Tat To, Van Mieu - Cat Linh, Ha noi
Branch Office: 11 E 4 11, Sky 3, Phu My Hung, Quan 7, Ho chi minh
WareHouse: 288 Giai Phong, Thanh Xuan, Ha noi / Tel 024 3668 6985
Hotline: +84 24 3990 1495 / +84 943 239 040
Tel: +84 24 3766 6909 Zalo: @cottovietnam @cottoehome
Email: sales@ehome.vn FB: @cottovietnam
Website: www.cotto.vn / www.ehome.vn

DISTRIBUTORS IN VIETNAM FOR

SCG COTTO