Dimensions Table

LPTC With thrust detecting mechanism
With stroke adjusting external limit switch (option)

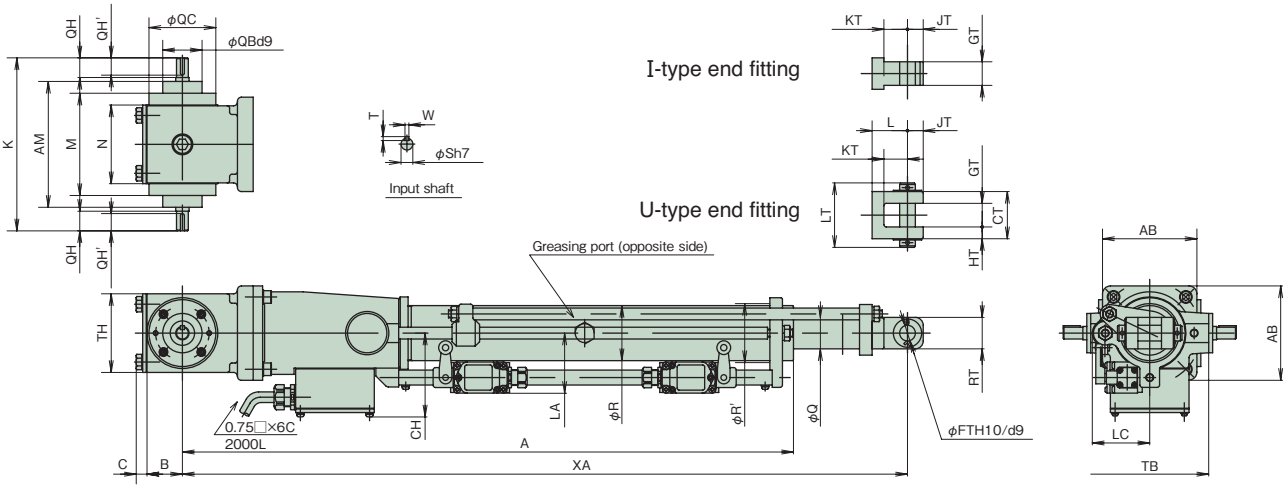

Unit: mm

Model	Stroke	Length		Input shaft						Input shaft bracket				Gear case				Bracket inner/outer cylinder					End fitting									limit switch	
		A	XA MIN	S	W	T	QH	QH'	K	QB	QC	AM	M	AB	TH	B	C	N	CH	TB	Q	R	FT	RT	CT	GT	HT	LT	KT	L	JT	LA	LC
LPTC 500	200	555	650	15	5	5	25	22	220	50	85	160	130	120	100	45	14	100	101	130	35	58	16	36	50	25	12.5	69	25	35	18	161	73
	300	655	760																														
	400	755	870																														
	500	855	980																													76.5	
	600	955	1085																														
	800	1155	1305																														
1000	200	595	700	15	5	5	25	22	220	50	85	160	130	120	100	45	14	100	107	150	40	70	20	40	60	30	15	82	30	45	20	161	73
	300	695	810																														
	400	795	920																														
	500	895	1030																													76.5	
	600	995	1135																														
	800	1195	1355																														
2000	200	675	795	20	6	6	30	25	270	60	110	200	160	130	130	55	17	130	110	180	50	76	25	50	70	35	17.5	99	40	60	25	164	76
	300	775	905																														
	400	875	1015																														
	500	975	1125																													79	
	600	1075	1230																														
	800	1275	1450																														
4000	200	790	925	35	10	8	70	60	450	80	160	300	230	190	190	80	19	190	127	220	70	95	32	70	80	40	20	115	50	75	35	182	85
	300	890	1035																														
	400	990	1145																														
	500	1090	1250																													97.5	
	600	1190	1360																														
	800	1390	1575																														
	1000	1590	1790																														
	1200	1790	2010																														
6000	500	1170	1325	35	10	8	70	60	480	80	160	330	260	220	220	80	26	220	139	260	80	115	40	80	—	45	—	—	65	—	40	—	—
	1000	1670	1875																														
	1500	2270	2525																														
8000	500	1245	1410	40	12	8	80	70	550	90	180	380	300	260	240	90	29	240	145	310	95	130	45	95	—	50	—	—	70	—	45	—	—
	1000	1745	1960																														
	1500	2245	2510																														
12000	500	1305	1490	40	12	8	80	70	550	90	180	380	300	260	240	90	29	240	160	350	110	160	50	110	—	65	—	—	90	—	55	—	—
	1000	1805	2040																														
	1500	2305	2590																														
	2000	2805	3140																														
16000	500	1460	1660	50	14	9	85	75	630	120	220	440	340	320	280	110	33	280	170	400	130	180	63	130	—	80	—	—	100	—	65	—	—
	1000	1960	2210																														
	1500	2460	2760																														
	2000	2960	3310																														
32000	500	1950	2210	60	18	11	120	100	940	200	320	680	520	500	450	175	36	450	238	540	180	240	90	180	—	125	—	—	140	—	90	—	—
	1000	2450	2760																														
	1500	2950	3310																														
	2000	3450	3860																														