Sprockets for RS Attachment Chain

RS Sprockets RS100 to RS160

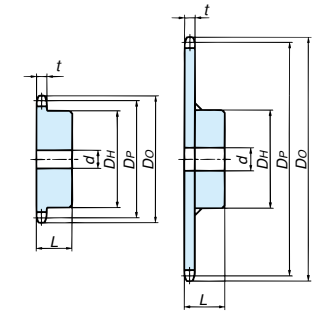

(Mechanically machined) (Welded construction)
1B type

Model Numbering Example

RS100 -1B 50T Q

Size
No. of strands/Hub type
No. of teeth
Teeth hardening
Q: Hardened
[Blank]: Unhardened

No. of Teeth	RS100 (t=18.0) PCD D_P	(Outer Dia.) (D_O)	Shaft Bore Dia. d: Pilot Bore	Max.	Hub: Dia. D_H	Length L	Approx. Mass kg	Material
10	102.75	117	18	43	65	50	1.8	Mechanically machined; machine-structural carbon steel
11	112.70	127	23	50	75	50	2.2	
12	122.67	138	23	57	86	50	2.8	
13	132.67	148	23	59	88	50	3.1	
14	142.68	158	23	59	88	50	3.4	
15	152.71	168	28	66	98	50	4.0	
16	162.75	179	28	66	98	50	4.3	
17	172.79	189	28	75	107	50	5.1	
18	182.84	199	28	75	107	50	5.4	
19	192.90	209	28	75	107	50	5.8	
20	202.96	220	28	75	107	50	6.3	
21	213.03	230	28	75	107	50	6.7	
22	223.10	240	33	80	117	56	8.1	
23	233.17	250	33	80	117	56	8.6	
24	243.25	260	33	80	117	56	9.1	
25	253.32	270	33	80	117	56	9.6	
26	263.41	281	33	80	117	56	10.2	
27	273.49	291	33	80	117	56	10.8	
28	283.57	301	33	80	117	56	11.4	
30	303.75	321	33	80	117	56	12.7	
32	323.92	341	33	80	117	56	14.1	Welded construction; machine-structural carbon steel (teeth, hub)
34	344.10	362	33	89	127	63	16.8	
35	354.20	372	33	89	127	63	17.5	
36	364.29	382	33	89	127	63	18.3	
38	384.48	402	33	89	127	63	20.0	
40	404.67	422	33	89	127	63	21.7	
42	424.86	443	33	89	127	63	23.6	
45	455.15	473	33	89	127	63	26.5	
48	485.45	503	33	89	127	63	**29.3**	
50	505.65	524	33	89	127	63	**31.5**	
54	546.05	564	33	103	147	80	**39.7**	
60	606.66	625	33	103	147	80	**47.4**	
65	657.17	675	33	103	147	80	**54.1**	
70	707.68	726	33	103	147	80	**61.8**	
75	758.20	777	33	103	147	80	**70.0**	

No. of Teeth	RS120 (t=24.0) PCD D_P	(Outer Dia.) (D_O)	Shaft Bore Dia. d: Pilot Bore	Max.	Hub: Dia. D_H	Length L	Approx. Mass kg	Material
10	123.29	140	23	51	78	56	3.0	Mechanically machined; machine-structural carbon steel
11	135.23	153	28	60	91	56	3.8	
12	147.21	165	28	66	98	56	4.5	
13	159.20	177	28	66	98	56	5.0	
14	171.22	190	28	75	107	56	6.0	
15	183.25	202	33	80	117	63	7.4	
16	195.29	214	33	80	117	63	8.1	
17	207.35	227	33	80	117	63	8.8	
18	219.41	239	33	80	117	63	9.5	
19	231.48	251	33	80	117	63	10.3	
20	243.55	263	33	89	127	63	11.7	
21	255.63	276	33	89	127	63	12.5	
22	267.72	288	33	89	127	63	13.6	Welded construction; machine-structural carbon steel (teeth, hub)
23	279.80	300	33	89	127	63	14.6	
24	291.90	312	33	89	127	63	15.6	
25	303.99	324	33	89	127	63	16.6	
26	316.09	337	33	89	127	63	17.7	
27	328.19	349	33	89	127	63	18.8	
28	340.29	361	33	103	147	71	22.3	
30	364.49	385	33	103	147	71	24.8	
32	388.71	410	33	103	147	71	27.4	
34	412.93	434	33	103	147	71	30.2	
35	425.04	446	33	103	147	71	**31.4**	
36	437.15	458	33	103	147	71	**33.0**	
38	461.37	483	38	103	147	80	**37.1**	
40	485.60	507	38	103	147	80	**40.4**	
42	509.83	531	38	103	147	80	**43.9**	
45	546.19	568	38	103	147	80	**49.5**	
48	582.54	604	38	103	147	80	**55.4**	
50	606.78	628	38	103	147	80	**59.6**	
54	655.26	677	38	110	157	90	**71.1**	
60	727.99	750	38	110	157	90	**85.8**	
65	788.60	811	38	118	167	94	**101.2**	
70	849.22	871	38	118	167	94	**115.7**	
75	909.84	932	38	118	167	94	**131.3**	

No. of Teeth	RS140 (t=24.0) PCD D_P	(Outer Dia.) (D_O)	Shaft Bore Dia. d: Pilot Bore	Max.	Hub: Dia. D_H	Length L	Approx. Mass kg	Material
10	143.84	163	28	60	91	56	4.1	Mechanically machined; machine-structural carbon steel
11	157.77	178	33	73	106	56	5.1	
12	171.74	193	33	80	117	56	6.3	
13	185.74	207	33	80	117	63	7.5	
14	199.76	221	33	89	127	63	8.9	
15	213.79	236	33	89	127	63	9.7	
16	227.84	250	33	89	127	63	10.6	
17	241.91	264	33	89	127	63	11.5	
18	255.98	279	33	89	127	63	12.5	
19	270.06	293	33	95	137	71	15.1	
20	284.14	307	33	95	137	71	16.2	
21	298.24	322	33	95	137	71	17.4	
22	312.34	336	33	103	147	71	19.6	Welded construction; machine-structural carbon steel (teeth, hub)
23	326.44	350	33	103	147	71	21.0	
24	340.54	364	33	103	147	71	22.3	
25	354.65	379	38	103	147	80	24.7	
26	368.77	393	38	103	147	80	**26.0**	
27	382.88	407	38	103	147	80	**27.6**	
28	397.00	421	38	103	147	80	**29.2**	
30	425.24	450	38	103	147	80	**32.6**	
32	453.49	478	38	103	147	80	**36.3**	
34	481.75	506	38	103	147	80	**40.1**	
35	495.88	521	38	110	157	90	**44.6**	
36	510.01	535	38	110	157	90	**46.7**	
38	538.27	563	38	110	157	90	**51.1**	
40	566.54	591	38	110	157	90	**55.6**	
42	594.81	620	38	118	167	94	**62.3**	
45	637.22	662	38	118	167	94	**70.0**	
48	679.63	705	38	118	167	94	**78.3**	
50	707.91	733	38	118	167	94	**84.0**	
54	764.47	790	38	118	167	94	**96.7**	
60	849.32	875	38	118	167	94	**116.6**	

No. of Teeth	RS160 (t=30.0) PCD D_P	(Outer Dia.) (D_O)	Shaft Bore Dia. d: Pilot Bore	Max.	Hub: Dia. D_H	Length L	Approx. Mass kg	Material	No. of Teeth
10	164.39	187	33	70	105	63	6.3	Mechanically machined; machine-structural carbon steel (teeth, hub)	**10**
11	180.31	203	33	80	117	63	7.8		**11**
12	196.28	220	33	89	127	63	9.4		**12**
13	212.27	237	33	95	137	71	11.9		**13**
14	228.29	253	33	95	137	71	13.2		**14**
15	244.33	269	33	95	137	71	14.5		**15**
16	260.39	286	33	103	147	71	16.7		**16**
17	276.46	302	33	103	147	71	18.2		**17**
18	292.55	319	33	103	147	71	19.9		**18**
19	308.64	335	33	103	147	71	21.6		**19**
20	324.74	351	33	103	147	71	23.4		**20**
21	340.84	368	33	103	147	71	25.4		**21**
22	356.96	384	38	118	167	80	30.6	Welded construction; machine-structural carbon steel (teeth, hub)	**22**
23	373.07	400	38	118	167	80	**32.4**		**23**
24	389.19	416	38	118	167	80	**34.6**		**24**
25	405.32	433	38	118	167	80	**37.0**		**25**
26	421.45	449	38	118	167	80	**39.5**		**26**
27	437.58	465	38	118	167	80	**42.0**		**27**
28	453.72	481	38	118	167	80	**44.6**		**28**
30	485.99	514	38	118	167	100	**53.5**		**30**
32	518.28	546	38	118	167	100	**59.5**		**32**
34	550.57	579	38	118	167	100	**65.8**		**34**
35	566.72	595	38	118	167	100	**69.2**		**35**
36	582.86	611	38	118	167	100	**72.6**		**36**
38	615.17	644	38	118	167	100	**80.1**		**38**
40	647.47	676	38	132	187	121	**94.4**		**40**
42	679.78	708	38	132	187	121	**102.2**		**42**
45	728.25	757	38	132	187	121	**115.2**		**45**
48	776.72	806	38	132	187	121	**128.5**		**48**
50	809.04	838	38	132	187	121	**137.9**		**50**
54	873.68	903	38	132	187	121	**157.7**		**54**
60	970.65	1000	38	132	187	121	**190.7**		**60**

Note: 1. Maximum bore diameters shown are standard figures. Determine bore diameter and key bearing pressure based on general mechanical design.
2. For hub types other than 1B and 2B, refer to the Tsubaki Drive Chains & Sprockets catalogue.
3. Models in the dimensional chart whose approximate mass is in bold font have one hanging hole. See the table below for more information.
4. Models in blue shaded areas have hardened teeth.
5. Models with unhardened teeth as standard can be manufactured with hardened teeth.
6. Models in shaded areas are made-to-order. All other models are stocked.
7. The above dimensions are nominal dimensions and may differ from actual dimensions.

◆ Hanging Hole Dimensions

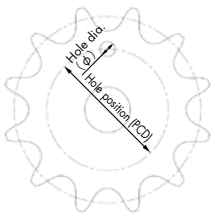

The phase relationship between the hanging hole and teeth may vary.

No. of Teeth		23T	24T	25T	26T	27T	28T	30T	32T	34T	35T	36T	38T	40T	42T	45T	48T	50T	54T	60T	65T	70T	75T
Hole Position (PCD) Size	RS100																392	412	453	513	564	614	665
	RS120										322	344	359	383	407	443	480	504	553	625	686	746	807
	RS140				263	277	291	319	348	376	390	404	432	461	489	531	574	602	659	743			
	RS160	261	277	293	309	326	342	374	406	438	455	471	503	535	568	616	665	697	762	859			
Hole Dia.		φ 40																					