Inovance

MD500 AC Drive

High Performance General Purpose Open Loop & Closed Loop

Features & Functions

- Open loop V/f & SVC control
- Closed loop FVC control
- Staring torque
  - 150% at 0.25Hz for SVC
  - 180% at 0Hz for FVC
- Communication:
  - Modbus-RTU
  - CANlink
  - PROFIBUS-DP
  - CANopen
- Automatic torque boost
- Slip compensation
- Simplified parameter for easy start up
- 4-independent S-ramps
- Flexible programmable I/O connection
- User programmable function
- Variable DC-injection braking
- Comprehensive trip diagnostics
- Output frequency 500Hz
- In-Built dynamic braking unit

NEW

Wide operating voltage
Three Phases 380-480Vac
18.5 ~ 450kW

NEW

LISTED
E467465
IND.CONT.EQ.

Operation in high ambient temperature
45°Cavg

External AC output reactor

NEW

Enhanced reliability

NEW

Internal DC Reactor
Complies with EN61800-3
Category C2
(With external filter)

*1PC-Based Software simplified start up & backup

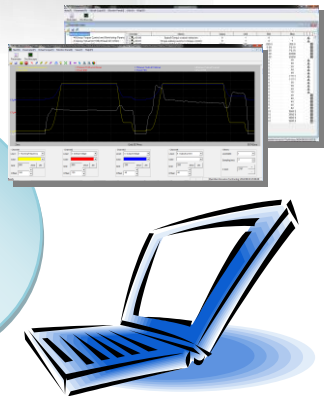

*1 PC tool kit hardware (optional)

General Specifications

Voltage class		Three Phase 380- 480Vac										
Drive model: MD500T**xxxGx**-INT		**18.5GB**	**22GB**	**30GB**	**37GB**	**45GB**	**55GB**	**75GB**	**90G**	**110G**	**132G**	**160G**
Frame size		**T5**		**T6**		**T7**		**T8**			**T9**	
Drive Input	Rated input voltage	**Three Phase 380 to 480Vac, -15% to +10%**										
	Rated input current, **[A]**	49.5	59	57	69	89	106	139	164	196	240	287
	Rated input frequency	**50/60 Hz, ±5%**										
Drive Output	Applicable motor **[kW]**	18.5	22	30	37	45	55	75	90	110	132	160
	Output current ,**[A]***	37	45	60	75	91	112	150	176	210	253	304
	Default carrier frequency, **[kHz]**	6	6	6	5	5	4	3	3	3	3	3
	Overload capacity	**150% for 60 Sec**										
	Max. output voltage	**Three Phase 380Vac to 480Vac (Proportional to input voltage)**										
	Max. output frequency	**500 Hz**										
Braking Resistor	Recommended power, **[kW]**	4	4.5	6	7	9	11	15	18	22	26	32
	Recommended resistance, **[Ω]**	32	27	10	16	13	10.5	7.7	6.4	5.3	4.4	3.6
Enclosure		**IP 20**										

Voltage class		Three Phase 380- 480Vac							
Drive model: MD500T**xxxG (-L)****-INT		**200G (-L)**	**220G (-L)**	**250G (-L)**	**280G (-L)**	**315G (-L)**	**355G (-L)**	**400G (-L)**	**450G (-L)**
Frame size		**T10**		**T11**		**T12**			
Drive Input	Rated input voltage	**Three Phase 380 to 480Vac, -15% to +10%**							
	Rated input current, **[A]**	365	410	441	495	565	617	687	782
	Power capacity, **[kVA]**	334	375	404	453	517	565	629	716
	Rated input frequency	**50/60 Hz, ±5%**							
Drive Output	Applicable motor **[kW]**	200	220	250	280	315	355	400	450
	Output current ,**[A]***	377	426	465	520	585	650	725	820
	Default carrier frequency, **[kHz]**	3	3	3	3	3	3	3	3
	Overload capacity	**150% for 60 Sec**							**130% for 60 Sec**
	Max. output voltage	**Three Phase 380Vac to 480Vac (Proportional to input voltage)**							
	Max. output frequency	**500 Hz**							
Braking Resistor	Recommended power, **[kW]**	38	42	48	54	60	69	78	87
	Recommended resistance, **[Ω]**	2.9	2.7	2.3	2.1	1.9	1.7	1.5	1.3
Enclosure		**IP 00**							

*Default carrier switching frequency at rated output current.
** Model name with '-L' means with the AC output reactor and support.

General Wiring Diagram

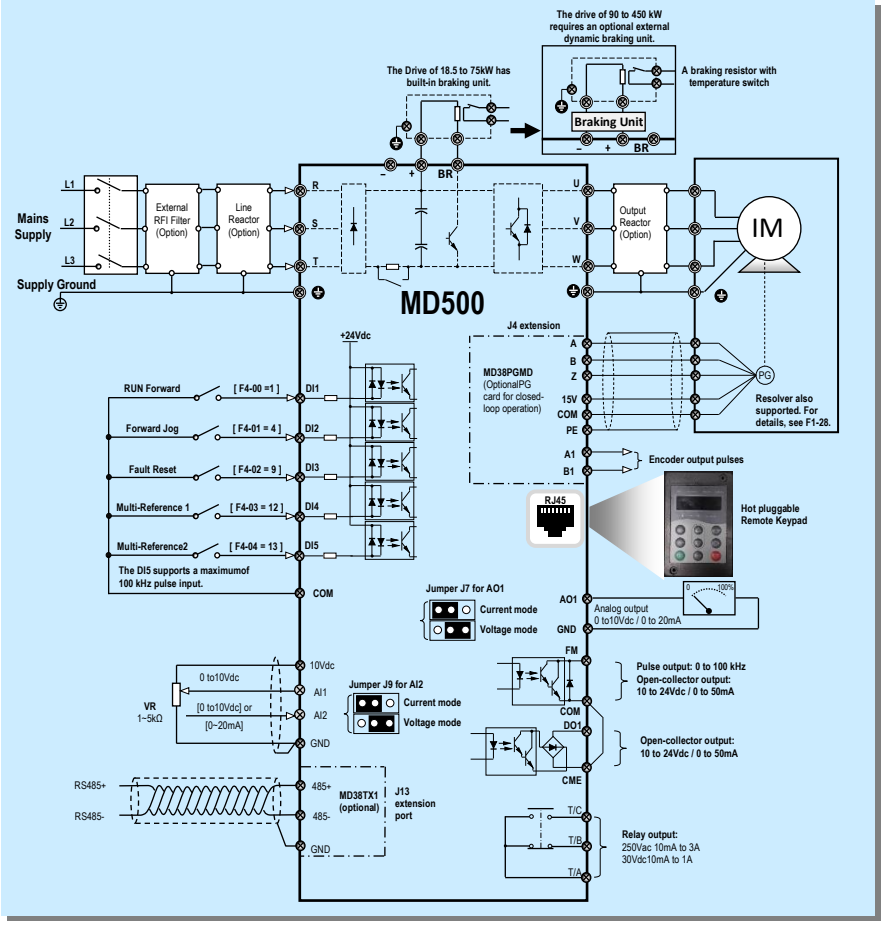

Dimensions

MD500T18.5GB-INT to MD500T37GB-INT

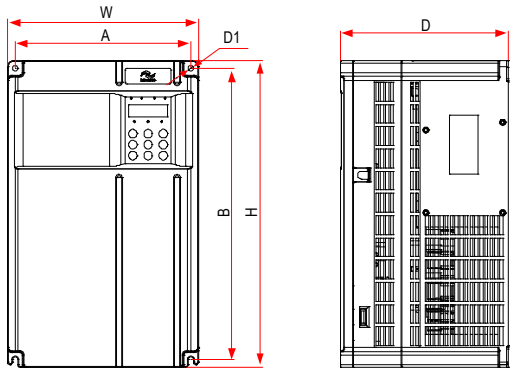

MD500T45GB-INT to MD500T160G-INT

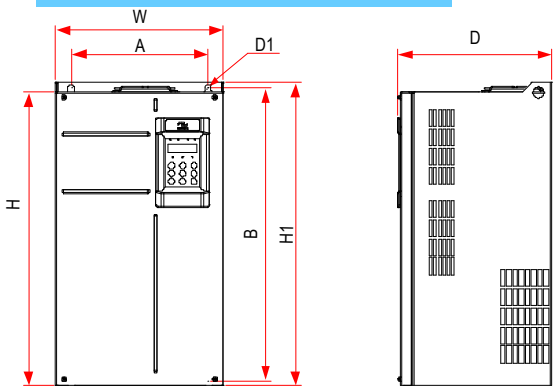

MD500T200G-L-INT to MD500T450G-L-INT

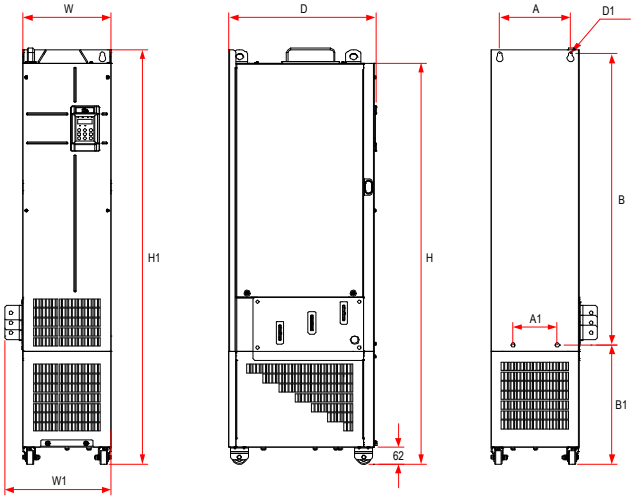

MD500T200G-INT to MD500T450G-INT

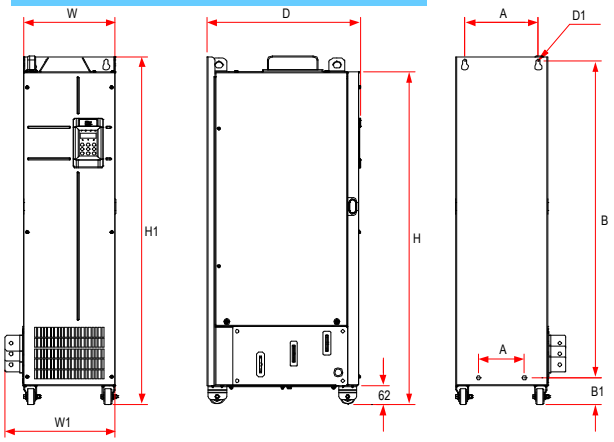

MD500 Model	Frame size	Dimensions (mm)										Weight (kg)
		A	A1	B	B1	H	H1	W	W1	D	D1	
MD500T18.5GB-INT, MD500T22GB-INT	T5	195	/	335	/	350	/	210	/	192	Ø6	9.1
MD500T30GB-INT, MD500T37GB-INT	T6	230	/	380	/	400	/	250	/	220	Ø7	17.5
MD500T45GB-INT, MD500T55GB-INT	T7	245	/	523	/	525	542	300	/	275	Ø10	35
MD500T75GB-INT, MD500T90G-INT, MD500T110G-INT	T8	270	/	560	/	554	580	338	/	315	Ø10	51.5
MD500T132G-INT, MD500T160G-INT	T9	320	/	890	/	874	915	400	/	320	Ø10	85
MD500T200G-INT, MD500T220G-INT	T10	240	150	1035	86	1086	1134	300	360	500	Ø13	110
MD500T200G-L-INT, MD500T220G-L-INT		240	150	1035	424	1424	1472	300	360	500	Ø13	160
MD500T250G-INT, MD500T280G-INT	T11	225	185	1175	97	1248	1284	330	390	545	Ø13	155
MD500T250G-L-INT, MD500T280G-L-INT		225	185	1175	435	1586	1622	330	390	545	Ø13	215
MD500T315G-INT, MD500T355G-INT, MD500T400G-INT, MD500T450G-INT	T12	240	200	1280	101	1355	1405	340	400	545	Ø16	185
MD500T315G-L-INT, MD500T355G-L-INT, MD500T400G-L-INT, MD500T450G-L-INT		240	200	1280	432	1683	1733	340	400	545	Ø16	245

Accessories List

Model	Function description	Part no.
MDBUN & MDBU	External braking unit of 90kW and larger power range.	--
MD32NKE1	Remote LED keypad.	01013061
MD38IO1	I/O extension card 1, provides the following extension terminals: 5x DI, 1x AI, 1x relay output, 1x DO, 1x AO, Modbus-RTU and CANlink.	01013098
MD38IO2	I/O extension card 2, provides 3x extra DI terminals.	01013103
MD38PC1	User programmable extension card, completely compatible with the Inovance PLC.	01013104
MD38CAN1	CANlink communication card	01013100
MD38CAN2	CANopen communication card	01013102
MD38TX1	Modbus communication card	01013112
MD38DP2	Profibus-DP communication card	01013144
MD38PG4	Resolver interface card, for using with a resolver that has an excitation frequency of 10 kHz. The card has a DB9 interface.	01013081
MD38PG5D	Open-collector encoder interface card, Open-collector encoder interface card with optional multiplying frequency division output. (Requires a 15 VDC power supply.)	01013141
MD38PG6	Differential encoder interface card, Requires a 5 VDC power supply. The card has a DB9 interface.	01013116
MD38PG6D	Differential encoder interface card, With optional multiplying frequency division output. Requires a 5 VDC power supply. The card has a DB9 interface.	01013142
MD38PGMD	Multifunctional encoder card, Compatible of differential input, open-collector input, push-pull input Supports differential output and open-collector output	01013147

The extension cards and the mounting positions

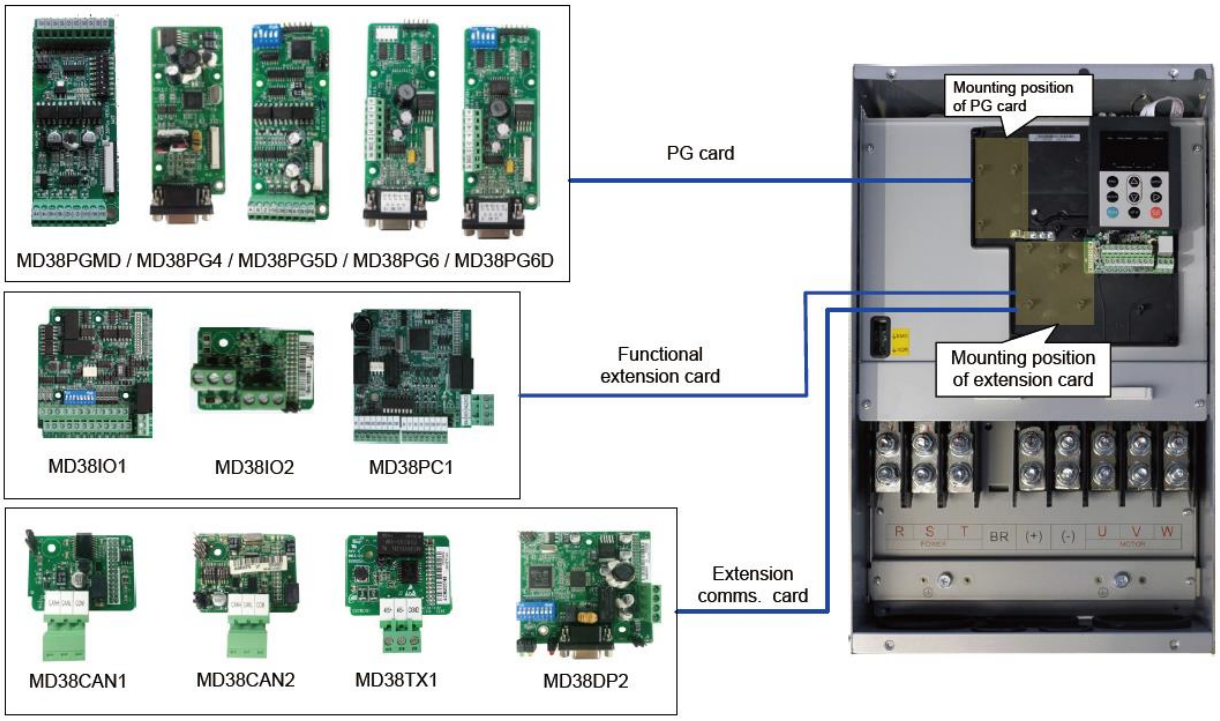

For more information, please contact our local offices.

Hong Kong SAR
Inova Automation Co., Limited
International Export Office
Tel : (852) 2751 6080
Fax : (852) 2751 6933
info@inova-automation.com
www.inova-automation.com

Italy - Milan
Inova Automation Italy Srl
Tel : (39) 02 2682 2318
info@inova-automation.com

India:
Inova Automation Pvt, Ltd.
Head Office Chennai
Tel : (91) 44 4380 0201
Ahmedabad Tel : (91) 79 4003 4274
Mumbai Tel : (91) 90 0496 0595
New Dehli Tel: (91) 99 9092 8961
info.inovaindia@inova-automation.com

Turkey - Istanbul
Inova Automation Türkiye
Tel : (90) 216 706 1789
info.turkey@inova-automation.com

©Inova Automation Co., Ltd. 2016. The information contained in the brochure is for guidance only.

Điện City
Connect & Innovate

CÔNG TY TNHH THƯƠNG MẠI KỸ THUẬT ĐIỆN CITY

Nhà phân phối thiết bị điện công nghiệp hàng đầu Việt Nam

TOGI KAKU® INOVANCE IDEC
Think Automation and beyond...

Fuji Electric
Innovating Energy Technology

MITSUBISHI ELECTRIC
Changes for the Better

TAIWAN METERS

LIÊN HỆ VỚI CHÚNG TÔI

Địa chỉ: 125 Phú Châu, KP1, P. Tam Bình, TP. Thủ Đức, TP. HCM
Hotline: 0909 808 905 (Zalo)
Email: minh.diencity@gmail.com
Website: diencity.com