ø22 Switches & Pilot Lights

YW Series

Innovative Design, Space-Saving, Safety, and Self-Cleaning Contacts

c UL us LISTED

(Emergency Stop Switch)

• See website for details on approvals and standards.

Emergency Stop Switches

Satisfy International Standards

- Safety Lock Mechanism
- Direct Opening Action
- Safe Pushbutton Design

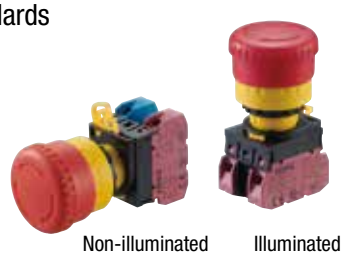

Non-illuminated Illuminated

Easy Operation

- Push-to-lock, Pull/Turn-to-release

YW emergency stop switches can be unlatched by either pulling or turning the operator.

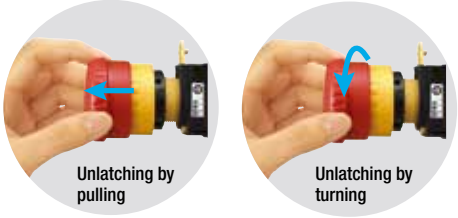

Unibody Pilot Lights

- Higher Brightness
- Measures only 42mm depth behind the panel
- Four Lens Shapes
- Panel Mounting

Flush Flush w/marking Extended Dome

Key Selector Switches

A variety of operations, key removal positions, and circuits.

Plastic Bezel Metal Bezel

Save

New Contact Block Design

YW series

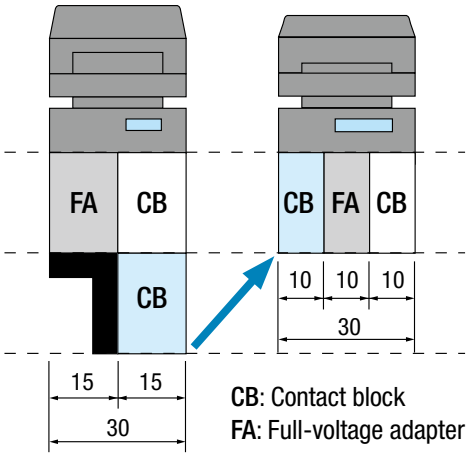

CB: Contact block
FA: Full-voltage adapter

The contact block design reduces the depth behind the panel.

Metal bezels are available for pushbuttons, illuminated pushbuttons, selector switches, and key selector switches.

Reliable

Retained Locking Lever

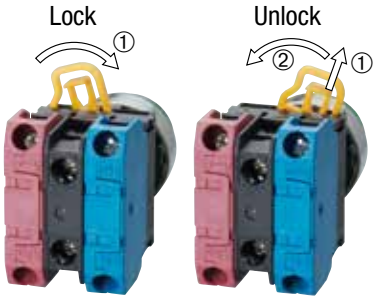

- Heavy-Duty Rugged Construction
- Self-Cleaning Wiping-Action Contacts with Scored Contact Surfaces

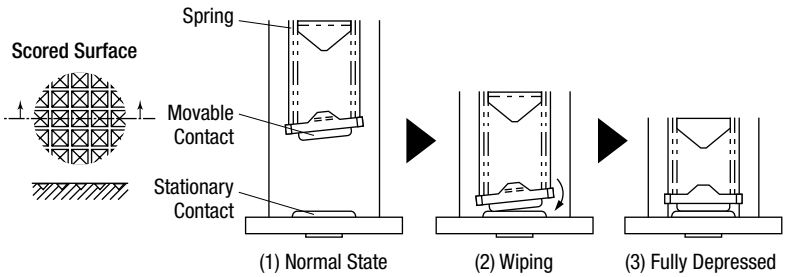

Safety

Integrated Finger-safe Terminal Cover
Degree of Protection: IP20 (From panel front: IP65)

YW Series Switches & Pilot Lights

Space-saving, 10-mm-thick contact blocks. Removable operator.

Contact Ratings (Contact Block)

Rated Insulation Voltage		600V			
Rated Thermal Current		10A			
Operating Voltage		24V	120V	240V	380V
AC 50/60 Hz	Resistive Load (AC-12)	10A	10A	6A	2A
	Inductive Load (AC-15)	10A	6A	3A	1.9A
DC	Resistive Load (DC-12)	8A	2.2A	1.1A	—
	Inductive Load (DC-13)	4A	1.1A	0.55A	—

LED Illuminated Unit Specifications

Pilot Light (removable lamp terminal type)
Illuminated Pushbutton

Unit						LED Lamp				
Unit Type	Input Type	Rated Voltage	Operating Voltage		Color Code	Lamp Base	Part No.	Rated Voltage	Current Draw	Color
Pilot Light (removable lamp terminal type) Illuminated Pushbutton	Full Voltage	6V AC/DC	6V AC/DC	±10%	A: amber G: green PW: pure white R: red S: blue W: white (Note) Y: yellow	BA9S/13	LSED-6②N	6V AC/DC	10mA (A, R, Y) 7mA (G, PW, S)	A: amber G: green PW: pure white R: red S: blue Y: yellow
		12V AC/DC	12V AC/DC				LSED-1②N	12V AC/DC	14mA (A, R, Y) 13mA (G, PW, S)	
		24V AC/DC	24V AC/DC				LSED-2②N	24V AC/DC	14mA (A, R, Y) 13mA (G, PW, S)	
		110V AC/DC	110V AC/DC				LSED-H②N	110V AC/DC	5mA	
		230/240V AC/DC	207 to 250V AC/DC				LSED-M3②N	230/240V AC/DC	3mA	
	Transformer (pilot light only) 50/60 Hz	100/110V AC	100/110V AC	±10%			LSED-6②N	6V AC/DC	10mA (A, R, Y) 7mA (G, PW, S)	
		200/220V AC	200/220V AC							
		115/120V AC	115/120V AC							
		230/240V AC	207 to 250V AC							

Pilot Light (unibody type)

Unit Type	Rated Voltage	Operating Voltage		Current Draw	Color Code
Pilot Light (unibody type)	6V AC/DC	6V AC/DC	±10%	16mA (A, R, W, Y) 13mA (G, PW, S)	A: amber G: green PW: pure white R: red S: blue W: white Y: yellow
	12V AC/DC	12V AC/DC		20mA	
	24V AC/DC	24V AC/DC		20mA	
	100/110V AC (50/60 Hz sine wave)	100/110V AC		20mA	
	230/240V AC (50/60 Hz sine wave)	230/240V AC	207 to 250V AC	20mA	

Incandescent Illuminated Unit Specifications

Pilot Light (removable lamp terminal type)
Illuminated Pushbutton

Unit						Incandescent Lamp		
Unit Type	Input Type	Rated Voltage	Operating Voltage		Color Code	Lamp Base	Part No.	Rating
Pilot Light (removable lamp terminal type) Illuminated Pushbutton	Full Voltage	6V AC/DC	6V AC/DC	±10%	A: amber G: green R: red S: blue W: white Y: yellow	BA9S/13	LS-T6	1W (6.3V)
		12V AC/DC	12V AC/DC				LS-T8	1W (18V)
		24V AC/DC	24V AC/DC				LS-T3	1W (30V)
	Transformer (pilot light only) 50/60 Hz	100/110V AC	100/110V AC				LS-T6	1W (6.3V)
		200/220V AC	200/220V AC					
		115/120V AC	115/120V AC					
		230/240V AC	207 to 250V AC					

Specifications

Operating Conditions	Operating temperature: –20 to +55°C (no freezing) Operating humidity: 45 to 85% RH (no condensation) Storage temperature: –45 to +80°C Storage humidity: 95% RH maximum
Degree of Protection	From panel front: IP65 (IEC 60529) Terminal: IP20 (IEC 60529)
Insulation Resistance	100 MΩ
Dielectric Strength	Contact block: 2,500V, 1 minute Pilot light: 2,000V, 1 minute
Vibration Resistance	<Emergency stop switch> Operating extremes / Damage limits: 10 to 500 Hz, amplitude 0.35 mm. acceleration 50 m/s^2 (5G) <Pushbutton, pilot light, illluminated pushbutton, selector switch, and key selector switch> Operating extremes: 5 to 55 Hz, amplitude 0.5 mm Damage limits: 30 Hz, amplitude 1.5 mm
Shock Resistance	<Emergency stop switch> Operating extremes: 150 m/s^2 (10G) Damage limits: 1,000 m/s^2 (100G) <Pushbutton, pilot light, illluminated pushbutton, selector switch, and key selector switch> Operating extremes: 100 m/s^2 (10G) Damage limits: 1,000 m/s^2 (100G)
Mechanical Life (minimum operations)	<Emergency stop switch> 250,000 (single contact block) <Pushbutton and illuminated pushbutton> Momentary: 5,000,000 (single contact block) 1,000,000 (double contact block) Maintained: 250,000 (single contact block) 100,000 (double contact block) <Selector switch and key selector switch> 250,000 (single contact block) 100,000 (double contact block)
Electrical Life (minimum operations)	<Emergency stop switch> 100,000 (single contact block) <Pushbutton, selector switch, and key selector switch> 100,000 (single contact block) 50,000 (double contact block)

Mounting Hole Layout

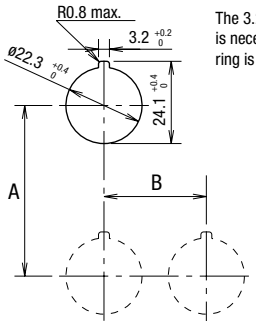

The 3.2-mm-wide key recess is necessary when the anti-rotation ring is used.

Unit	A (mm)	B (mm)
Emergency stop switch	50 min.	50 min.
Pushbutton Selector switch Key selector switch	50 min.	30 min.
Mushroom pushbutton	50 min.	40 min.
Pilot light (with removable lamp terminal)	30 min.*	30 min.
Pilot light (unibody)	50 min.	30 min.

* Keep a minimum spacing of 50 mm when using a lamp of over 1W.

ø22 YW Series Emergency Stop Switches

Non-illuminated Emergency Stop Switches (Pushlock Pull/Turn Reset)

Package Quantity: 1

Style	Contact	Contact Block Mounting Position			Part No.	Button Color Code
		1	2	3		
ø40mm Mushroom	1NC	—	—	NC	YW1B-V4E01R	Red only
	2NC	NC	—	NC	YW1B-V4E02R	
	3NC	NC	NC	NC	YW1B-V4E03R	
	1NO-1NC	NO	—	NC	YW1B-V4E11R	
	1NO-2NC	NO	NC	NC	YW1B-V4E12R	
	2NO-1NC	NO	NC	NO	YW1B-V4E21R	

- When pressed, the button is locked in the depressed position, and is reset when either pulled or turned clockwise.

Dimensions

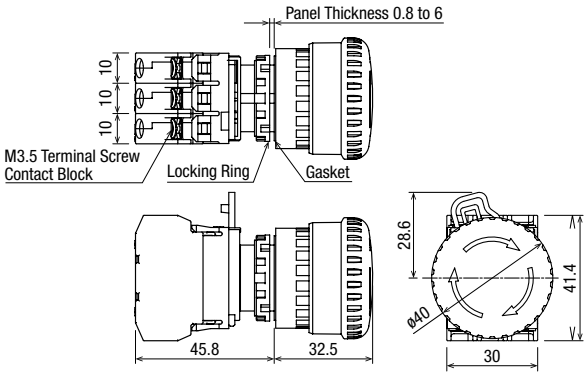

Contact Block Mounting Position

Illuminated Emergency Stop Switches (Pushlock Pull/Turn Reset)

Package Quantity: 1

Style	Lamp	Contacts	Contact Block Mounting Position			Part No.	③ Operating Voltage Code	Lens Color Code
			1	2	3			
ø40mm Mushroom	Without Lamp	1NC	—	FA	NC	YW1L-V4E01Q0R	0: without lamp 250V AC/DC max.	Red only
		2NC	NC	FA	NC	YW1L-V4E02Q0R		
		1NO-1NC	NO	FA	NC	YW1L-V4E11Q0R		
	LED	1NC	—	FA	NC	YW1L-V4E01Q③R	2: 6V AC/DC 3: 12V AC/DC 4: 24V AC/DC H: 110V AC/DC M3: 230/240V AC/DC	
		2NC	NC	FA	NC	YW1L-V4E02Q③R		
		1NO-1NC	NO	FA	NC	YW1L-V4E11Q③R		
	Incandescent	1NC	—	FA	NC	YW1L-V4E01Q③R	5: 6V AC/DC 6: 12V AC/DC 7: 24V AC/DC	
		2NC	NC	FA	NC	YW1L-V4E02Q③R		
		1NO-1NC	NO	FA	NC	YW1L-V4E11Q③R		

- Specify an operating voltage code in place of ③ in the Part No.
- When pressed, the button is locked in the depressed position, and is reset when either pulled or turned clockwise.

FA: Full voltage adapter

Dimensions

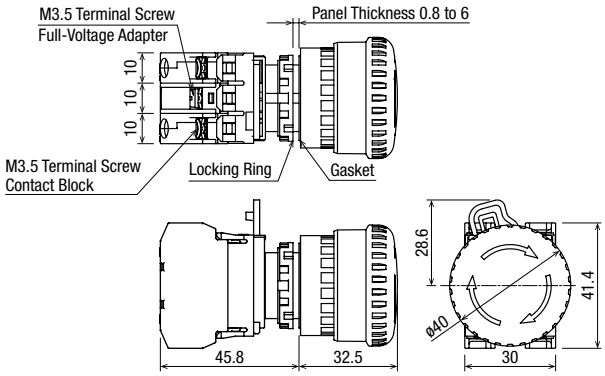

Contact Block Mounting Position

Pushbuttons with Plastic Bezel (Pushlock Pull/Turn Reset)

Package Quantity: 1

Shape	Operation	Contact	Contact Block Mounting Position 1	2	3	Part No.	① Button Color Code
Flush	Momentary	1NO	NO	—	—	YW1B-M1E10①	B: black G: green R: red S: blue W: white Y: yellow
		1NC	—	—	NC	YW1B-M1E01①	
		2NO	NO	—	NO	YW1B-M1E20①	
		2NC	NC	—	NC	YW1B-M1E02①	
		1NO-1NC	NO	—	NC	YW1B-M1E11①	
		3NO	NO	NO	NO	YW1B-M1E30①	
		3NC	NC	NC	NC	YW1B-M1E03①	
		2NO-1NC	NO	NC	NO	YW1B-M1E21①	
		1NO-2NC	NO	NC	NC	YW1B-M1E12①	
	Maintained	1NO	NO	—	—	YW1B-A1E10①	
		1NC	—	—	NC	YW1B-A1E01①	
		2NO	NO	—	NO	YW1B-A1E20①	
		2NC	NC	—	NC	YW1B-A1E02①	
		1NO-1NC	NO	—	NC	YW1B-A1E11①	
Extended	Momentary	1NO	NO	—	—	YW1B-M2E10①	B: black G: green R: red S: blue W: white Y: yellow
		1NC	—	—	NC	YW1B-M2E01①	
		2NO	NO	—	NO	YW1B-M2E20①	
		2NC	NC	—	NC	YW1B-M2E02①	
		1NO-1NC	NO	—	NC	YW1B-M2E11①	
	Maintained	1NO	NO	—	—	YW1B-A2E10①	
		1NC	—	—	NC	YW1B-A2E01①	
		2NO	NO	—	NO	YW1B-A2E20①	
		2NC	NC	—	NC	YW1B-A2E02①	
		1NO-1NC	NO	—	NC	YW1B-A2E11①	
Mushroom ø40mm	Momentary	1NO	NO	—	—	YW1B-M4E10①	B: black G: green R: red S: blue W: white Y: yellow
		1NC	—	—	NC	YW1B-M4E01①	
		2NO	NO	—	NO	YW1B-M4E20①	
		2NC	NC	—	NC	YW1B-M4E02①	
		1NO-1NC	NO	—	NC	YW1B-M4E11①	
	Maintained	1NO	NO	—	—	YW1B-A4E10①	
		1NC	—	—	NC	YW1B-A4E01①	
		2NO	NO	—	NO	YW1B-A4E20①	
		2NC	NC	—	NC	YW1B-A4E02①	
		1NO-1NC	NO	—	NC	YW1B-A4E11①	

Note: Specify a button color code in place of ① in the Part No.

Dimensions

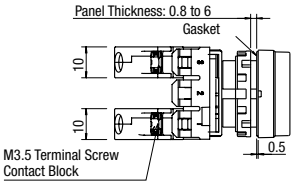

Contact Block Mounting Position

Flush

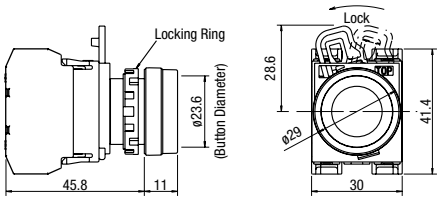

Extended

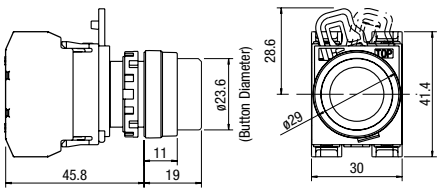

Mushroom

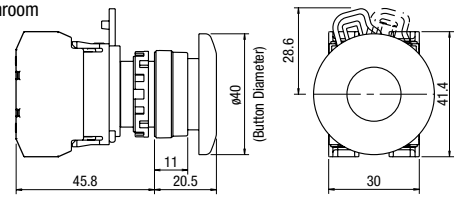

All dimensions in mm.

APEM
Switches & Pilot Lights
Control Boxes
Emergency Stop Switches
Enabling Switches
Safety Products
Explosion Proof
Terminal Blocks
Relays & Sockets
Circuit Protectors
Power Supplies
LED Illumination
Controllers
Operator Interfaces
Sensors
AUTO-ID
Flush Silhouette
ø16
ø22
ø30
Miniature
Pilot Lights
HW
TW
YW

ø22 YW Series Switches & Pilot Lights

Pushbuttons with Metal Bezel

Package Quantity: 1

Shape	Operation	Contact	Contact Block Mounting Position 1	2	3	Part No.	① Button Color Code
Flush	Momentary	1NO	NO	—	—	YW4B-M1E10①	B: black G: green R: red S: blue W: white Y: yellow
		1NC	—	—	NC	YW4B-M1E01①	
		2NO	NO	—	NO	YW4B-M1E20①	
		2NC	NC	—	NC	YW4B-M1E02①	
		1NO-1NC	NO	—	NC	YW4B-M1E11①	
		3NO	NO	NO	NO	YW4B-M1E30①	
		3NC	NC	NC	NC	YW4B-M1E03①	
		2NO-1NC	NO	NC	NO	YW4B-M1E21①	
		1NO-2NC	NO	NC	NC	YW4B-M1E12①	
	Maintained	1NO	NO	—	—	YW4B-A1E10①	
		1NC	—	—	NC	YW4B-A1E01①	
		2NO	NO	—	NO	YW4B-A1E20①	
		2NC	NC	—	NC	YW4B-A1E02①	
		1NO-1NC	NO	—	NC	YW4B-A1E11①	
Extended	Momentary	1NO	NO	—	—	YW4B-M2E10①	B: black G: green R: red S: blue W: white Y: yellow
		1NC	—	—	NC	YW4B-M2E01①	
		2NO	NO	—	NO	YW4B-M2E20①	
		2NC	NC	—	NC	YW4B-M2E02①	
		1NO-1NC	NO	—	NC	YW4B-M2E11①	
	Maintained	1NO	NO	—	—	YW4B-A2E10①	
		1NC	—	—	NC	YW4B-A2E01①	
		2NO	NO	—	NO	YW4B-A2E20①	
		2NC	NC	—	NC	YW4B-A2E02①	
		1NO-1NC	NO	—	NC	YW4B-A2E11①	
Mushroom ø40mm	Momentary	1NO	NO	—	—	YW4B-M4E10①	B: black G: green R: red S: blue W: white Y: yellow
		1NC	—	—	NC	YW4B-M4E01①	
		2NO	NO	—	NO	YW4B-M4E20①	
		2NC	NC	—	NC	YW4B-M4E02①	
		1NO-1NC	NO	—	NC	YW4B-M4E11①	
	Maintained	1NO	NO	—	—	YW4B-A4E10①	
		1NC	—	—	NC	YW4B-A4E01①	
		2NO	NO	—	NO	YW4B-A4E20①	
		2NC	NC	—	NC	YW4B-A4E02①	
		1NO-1NC	NO	—	NC	YW4B-A4E11①	

Note: Specify a button color code in place of ① in the Part No.

Dimensions

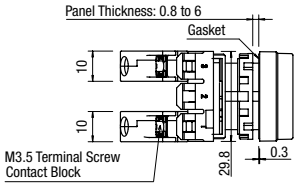

Contact Block Mounting Position

Flush

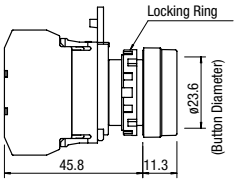

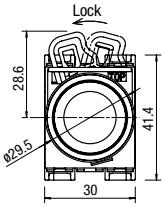

Extended

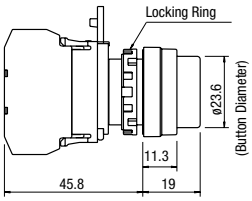

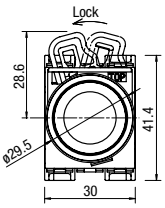

Mushroom

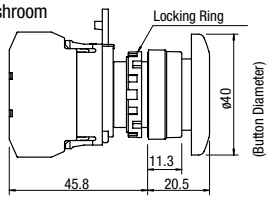

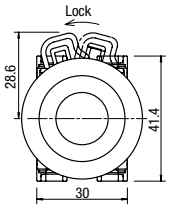

All dimensions in mm.

Pilot Lights (Unibody)

Package Quantity: 1

Shape	Lamp	Operating Voltage	Part No.	② Lens Color Code
Flush Full Voltage	LED	6V AC/DC	YW1P-1UQ2②	A: amber G: green PW: pure white R: red S: blue W: white Y: yellow
		12V AC/DC	YW1P-1UQ3②	
		24V AC/DC	YW1P-1UQ4②	
		100/110V AC	YW1P-1UQH②	
		230/240V AC	YW1P-1UQM3②	
Flush Marking Full Voltage	LED	6V AC/DC	YW1P-1BUQ2②	
		12V AC/DC	YW1P-1BUQ3②	
		24V AC/DC	YW1P-1BUQ4②	
		100/110V AC	YW1P-1BUQH②	
		230/240V AC	YW1P-1BUQM3②	
Extended Full Voltage	LED	6V AC/DC	YW1P-2TUQ2②	
		12V AC/DC	YW1P-2TUQ3②	
		24V AC/DC	YW1P-2TUQ4②	
		100/110V AC	YW1P-2TUQH②	
		230/240V AC	YW1P-2TUQM3②	
Dome Full Voltage	LED	6V AC/DC	YW1P-2UQ2②	
		12V AC/DC	YW1P-2UQ3②	
		24V AC/DC	YW1P-2UQ4②	
		100/110V AC	YW1P-2UQH②	
		230/240V AC	YW1P-2UQM3②	

Dimensions

Flush

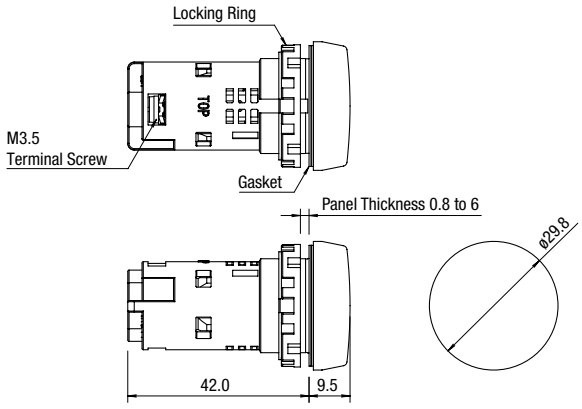

Flush Marking

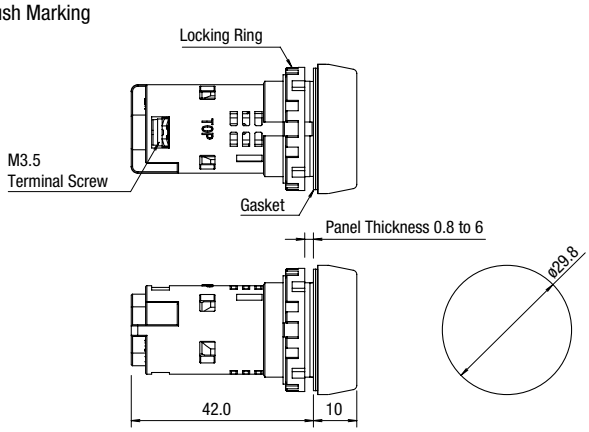

Extended

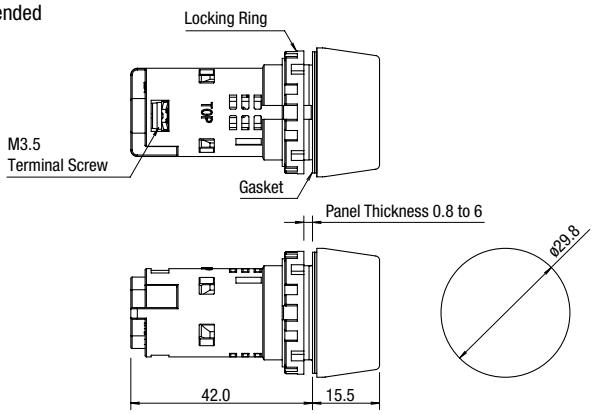

Dome

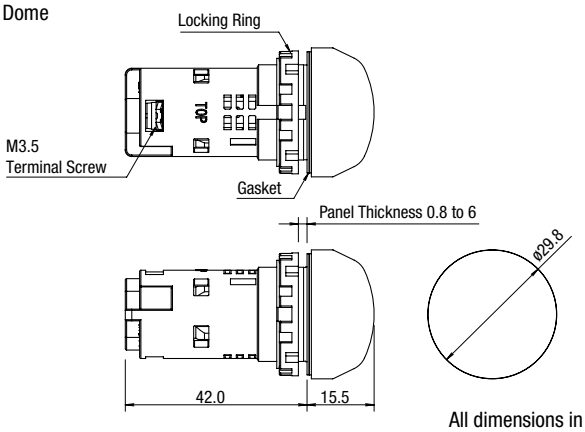

All dimensions in mm.

APEM
Switches & Pilot Lights
Control Boxes
Emergency Stop Switches
Enabling Switches
Safety Products
Explosion Proof
Terminal Blocks
Relays & Sockets
Circuit Protectors
Power Supplies
LED Illumination
Controllers
Operator Interfaces
Sensors
AUTO-ID
Flush Silhouette
ø16
ø22
ø30
Miniature
Pilot Lights
HW
TW
YW

ø22 YW Series Switches & Pilot Lights

Pilot Lights (with Removable Lamp Terminal)

Package Quantity: 1

Shape	Lamp	Operating Voltage	Part No.	② Lens Color Code
Flush Full Voltage 	Without Lamp	250V AC/DC max.	YW1P-1EQ0②	A (amber), C (clear), G (green), R (red), S (blue), W (white), Y (yellow)
	LED	6V AC/DC	YW1P-1EQ2②	A (amber), G (green), PW (pure white), R (red), S (blue), W (white), Y (yellow) Built-in LED lamp: LSED-③②N
		12V AC/DC	YW1P-1EQ3②	
		24V AC/DC	YW1P-1EQ4②	
		110V AC/DC	YW1P-1EQH②	
		230/240V AC/DC	YW1P-1EQM3②	
	Incandescent	6V AC/DC	YW1P-1EQ5②	A (amber), C (clear), G (green), R (red), S (blue), W (white), Y (yellow) Built-in incandescent lamp: LS-T③
		12V AC/DC	YW1P-1EQ6②	
		24V AC/DC	YW1P-1EQ7②	
Flush Transformer 	LED	100/110V AC	YW1P-1EH2②	A (amber), G (green), PW (pure white), R (red), S (blue), W (white), Y (yellow) Built-in LED lamp: LSED-6②N
		200/220V AC	YW1P-1EM2②	
		115/120V AC	YW1P-1EH22②	
		230/240V AC	YW1P-1EM42②	
	Incandescent	100/110V AC	YW1P-1EH5②	A (amber), C (clear), G (green), R (red), S (blue), W (white), Y (yellow) Built-in incandescent lamp: LS-T6
		200/220V AC	YW1P-1EM5②	
		115/120V AC	YW1P-1EH25②	
		230/240V AC	YW1P-1EM45②	
Flush Marking Full Voltage 	Without Lamp	250V AC/DC max.	YW1P-1BEQ0②	A (amber), G (green), R (red), S (blue), W (white), Y (yellow)
	LED	6V AC/DC	YW1P-1BEQ2②	A (amber), G (green), PW (pure white), R (red), S (blue), W (white), Y (yellow) Built-in LED lamp: LSED-③②N
		12V AC/DC	YW1P-1BEQ3②	
		24V AC/DC	YW1P-1BEQ4②	
		110V AC/DC	YW1P-1BEQH②	
		230/240V AC/DC	YW1P-1BEQM3②	
	Incandescent	6V AC/DC	YW1P-1BEQ5②	A (amber), G (green), R (red), S (blue), W (white), Y (yellow) Built-in incandescent lamp: LS-T③
		12V AC/DC	YW1P-1BEQ6②	
		24V AC/DC	YW1P-1BEQ7②	
Flush Marking Transformer 	LED	100/110V AC	YW1P-1BEH2②	A (amber), G (green), PW (pure white), R (red), S (blue), W (white), Y (yellow) Built-in LED lamp: LSED-6②N
		200/220V AC	YW1P-1BEM2②	
		115/120V AC	YW1P-1BEH22②	
		230/240V AC	YW1P-1BEM42②	
	Incandescent	100/110V AC	YW1P-1BEH5②	A (amber), G (green), R (red), S (blue), W (white), Y (yellow) Built-in incandescent lamp: LS-T6
		200/220V AC	YW1P-1BEM5②	
		115/120V AC	YW1P-1BEH25②	
		230/240V AC	YW1P-1BEM45②	

Note: Specify a lens color code in place of ② in the Part No.
Clear lenses are used for PW (pure white) illumination of pilot lights.

Pilot Lights (with Removable Lamp Terminal)

Package Quantity: 1

Shape	Lamp	Operating Voltage	Part No.	② Lens Color Code
Extended Full Voltage	Without Lamp	250V AC/DC max.	YW1P-2TEQ0②	A (amber), C (clear), G (green), R (red), S (blue), W (white), Y (yellow)
	LED	6V AC/DC	YW1P-2TEQ2②	A (amber), G (green), PW (pure white), R (red), S (blue), W (white), Y (yellow) Built-in LED lamp: LSED-③②N
		12V AC/DC	YW1P-2TEQ3②	
		24V AC/DC	YW1P-2TEQ4②	
		110V AC/DC	YW1P-2TEQH②	
		230/240V AC/DC	YW1P-2TEQM3②	
	Incandescent	6V AC/DC	YW1P-2TEQ5②	A (amber), C (clear), G (green), R (red), S (blue), W (white), Y (yellow) Built-in incandescent lamp: LS-T③
		12V AC/DC	YW1P-2TEQ6②	
		24V AC/DC	YW1P-2TEQ7②	
Extended Transformer	LED	100/110V AC	YW1P-2TEH2②	A (amber), G (green), PW (pure white), R (red), S (blue), W (white), Y (yellow) Built-in LED lamp: LSED-6②N
		200/220V AC	YW1P-2TEM2②	
		115/120V AC	YW1P-2TEH22②	
		230/240V AC	YW1P-2TEM42②	
	Incandescent	100/110V AC	YW1P-2TEH5②	A (amber), C (clear), G (green), R (red), S (blue), W (white), Y (yellow) Built-in incandescent lamp: LS-T6
		200/220V AC	YW1P-2TEM5②	
		115/120V AC	YW1P-2TEH25②	
		230/240V AC	YW1P-2TEM45②	
Dome Full Voltage	Without Lamp	250V AC/DC max.	YW1P-2EQ0②	A (amber), C (clear), G (green), R (red), S (blue), W (white), Y (yellow)
	LED	6V AC/DC	YW1P-2EQ2②	A (amber), G (green), PW (pure white), R (red), S (blue), W (white), Y (yellow) Built-in LED lamp: LSED-③②N
		12V AC/DC	YW1P-2EQ3②	
		24V AC/DC	YW1P-2EQ4②	
		110V AC/DC	YW1P-2EQH②	
		230/240V AC/DC	YW1P-2EQM3②	
	Incandescent	6V AC/DC	YW1P-2EQ5②	A (amber), C (clear), G (green), R (red), S (blue), W (white), Y (yellow) Built-in incandescent lamp: LS-T③
		12V AC/DC	YW1P-2EQ6②	
		24V AC/DC	YW1P-2EQ7②	
Dome Transformer	LED	100/110V AC	YW1P-2EH2②	A (amber), G (green), PW (pure white), R (red), S (blue), W (white), Y (yellow) Built-in LED lamp: LSED-6②N
		200/220V AC	YW1P-2EM2②	
		115/120V AC	YW1P-2EH22②	
		230/240V AC	YW1P-2EM42②	
	Incandescent	100/110V AC	YW1P-2EH5②	A (amber), C (clear), G (green), R (red), S (blue), W (white), Y (yellow) Built-in incandescent lamp: LS-T6
		200/220V AC	YW1P-2EM5②	
		115/120V AC	YW1P-2EH25②	
		230/240V AC	YW1P-2EM45②	

Note: Specify a lens color code in place of ② in the Part No.
Clear lenses are used for PW (pure white) illumination of pilot lights.

ø22 YW Series Switches & Pilot Lights

Dimensions

All dimensions in mm

Pilot Lights (with Removable Lamp Terminal)

Flush
Full Voltage

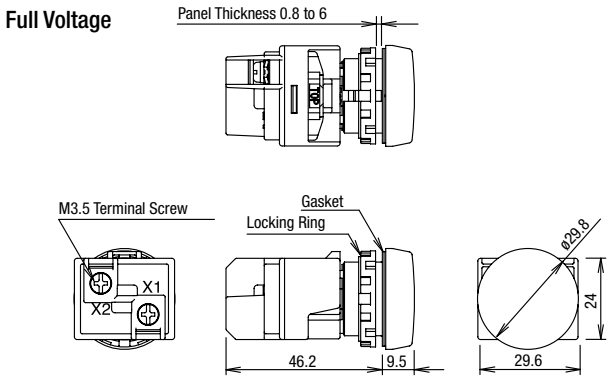

Flush Marking
Full Voltage

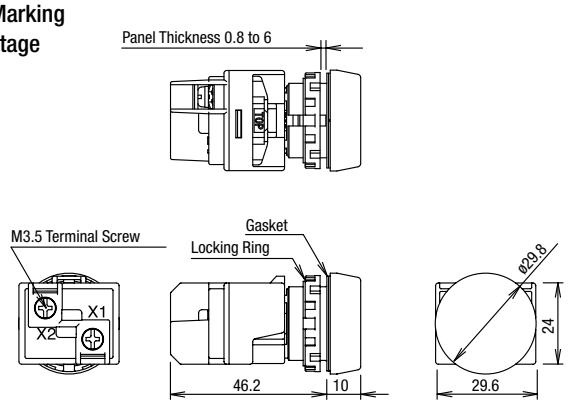

Transformer

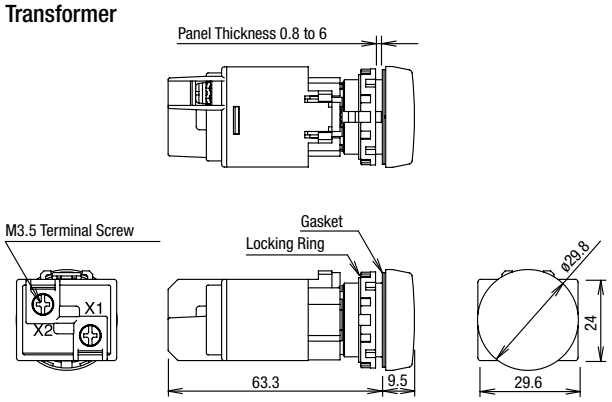

Transformer

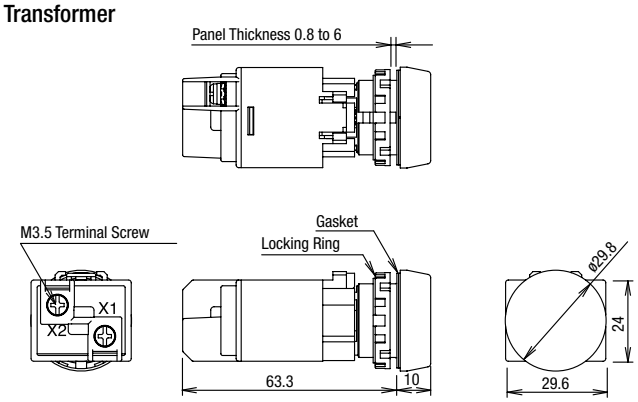

Extended
Full Voltage

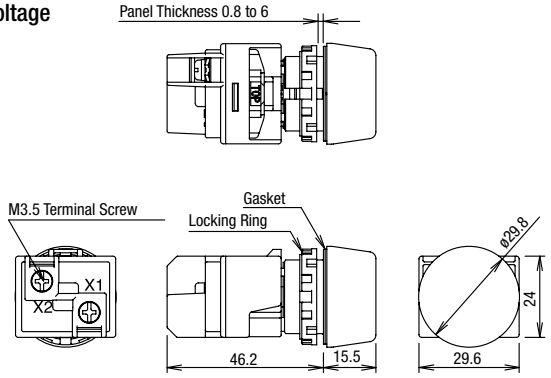

Dome
Full Voltage

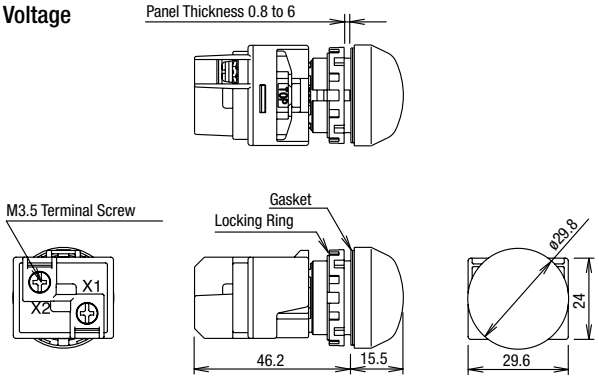

Transformer

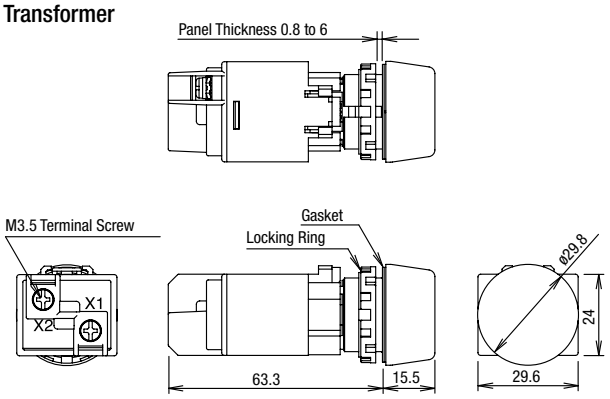

Transformer

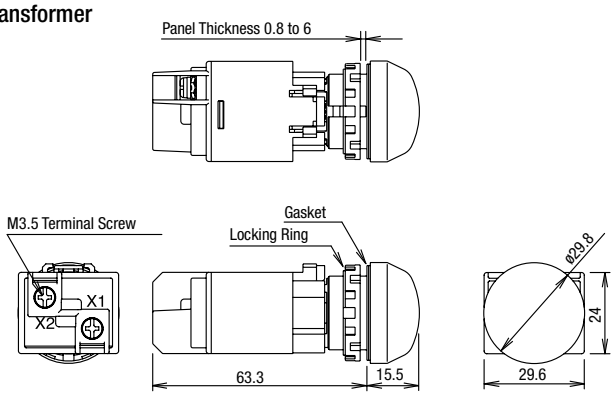

Illuminated Pushbuttons with Plastic Bezel

Package Quantity: 1

Shape	Lamp	Operation	Contact	Contact Block Mounting Position 1	2	3	Part No.	③ Operating Voltage Code	② Lens Color Code
Extended	Without Lamp	Momentary	1NO	NO	FA	—	YW1L-M2E10Q0②	0: without lamp 250V AC/DC max.	A: amber G: green R: red S: blue W: white Y: yellow
			1NC	—	FA	NC	YW1L-M2E01Q0②		
			2NO	NO	FA	NO	YW1L-M2E20Q0②		
			2NC	NC	FA	NC	YW1L-M2E02Q0②		
			1NO-1NC	NO	FA	NC	YW1L-M2E11Q0②		
		Maintained	1NO	NO	FA	—	YW1L-A2E10Q0②		
			1NC	—	FA	NC	YW1L-A2E01Q0②		
			2NO	NO	FA	NO	YW1L-A2E20Q0②		
			2NC	NC	FA	NC	YW1L-A2E02Q0②		
			1NO-1NC	NO	FA	NC	YW1L-A2E11Q0②		
	LED	Momentary	1NO	NO	FA	—	YW1L-M2E10Q③②	2: 6V AC/DC 3: 12V AC/DC 4: 24V AC/DC H: 110V AC/DC M3: 230/240V AC/DC	A: amber G: green PW: pure white R: red S: blue W: white Y: yellow Built-in LED lamp: LSED-③②N
			1NC	—	FA	NC	YW1L-M2E01Q③②		
			2NO	NO	FA	NO	YW1L-M2E20Q③②		
			2NC	NC	FA	NC	YW1L-M2E02Q③②		
			1NO-1NC	NO	FA	NC	YW1L-M2E11Q③②		
		Maintained	1NO	NO	FA	—	YW1L-A2E10Q③②		
			1NC	—	FA	NC	YW1L-A2E01Q③②		
			2NO	NO	FA	NO	YW1L-A2E20Q③②		
			2NC	NC	FA	NC	YW1L-A2E02Q③②		
			1NO-1NC	NO	FA	NC	YW1L-A2E11Q③②		
	Incandescent	Momentary	1NO	NO	FA	—	YW1L-M2E10Q③②	5: 6V AC/DC 6: 12V AC/DC 7: 24V AC/DC	A: amber G: green R: red S: blue W: white Y: yellow Built-in incandescent lamp: LS-T③
			1NC	—	FA	NC	YW1L-M2E01Q③②		
			2NO	NO	FA	NO	YW1L-M2E20Q③②		
			2NC	NC	FA	NC	YW1L-M2E02Q③②		
			1NO-1NC	NO	FA	NC	YW1L-M2E11Q③②		
		Maintained	1NO	NO	FA	—	YW1L-A2E10Q③②		
			1NC	—	FA	NC	YW1L-A2E01Q③②		
			2NO	NO	FA	NO	YW1L-A2E20Q③②		
			2NC	NC	FA	NC	YW1L-A2E02Q③②		
			1NO-1NC	NO	FA	NC	YW1L-A2E11Q③②		
Extended with Full Shroud	Without Lamp	Momentary	1NO	NO	FA	—	YW1L-MF2E10Q0②	0: without lamp 250V AC/DC max.	A: amber G: green R: red S: blue W: white Y: yellow
			1NC	—	FA	NC	YW1L-MF2E01Q0②		
			2NO	NO	FA	NO	YW1L-MF2E20Q0②		
			2NC	NC	FA	NC	YW1L-MF2E02Q0②		
			1NO-1NC	NO	FA	NC	YW1L-MF2E11Q0②		
		Maintained	1NO	NO	FA	—	YW1L-AF2E10Q0②		
			1NC	—	FA	NC	YW1L-AF2E01Q0②		
			2NO	NO	FA	NO	YW1L-AF2E20Q0②		
			2NC	NC	FA	NC	YW1L-AF2E02Q0②		
			1NO-1NC	NO	FA	NC	YW1L-AF2E11Q0②		
	LED	Momentary	1NO	NO	FA	—	YW1L-MF2E10Q③②	2: 6V AC/DC 3: 12V AC/DC 4: 24V AC/DC H: 110V AC/DC M3: 230/240V AC/DC	A: amber G: green PW: pure white R: red S: blue W: white Y: yellow Built-in LED lamp: LSED-③②N
			1NC	—	FA	NC	YW1L-MF2E01Q③②		
			2NO	NO	FA	NO	YW1L-MF2E20Q③②		
			2NC	NC	FA	NC	YW1L-MF2E02Q③②		
			1NO-1NC	NO	FA	NC	YW1L-MF2E11Q③②		
		Maintained	1NO	NO	FA	—	YW1L-AF2E10Q③②		
			1NC	—	FA	NC	YW1L-AF2E01Q③②		
			2NO	NO	FA	NO	YW1L-AF2E20Q③②		
			2NC	NC	FA	NC	YW1L-AF2E02Q③②		
			1NO-1NC	NO	FA	NC	YW1L-AF2E11Q③②		
	Incandescent	Momentary	1NO	NO	FA	—	YW1L-MF2E10Q③②	5: 6V AC/DC 6: 12V AC/DC 7: 24V AC/DC	A: amber G: green R: red S: blue W: white Y: yellow Built-in incandescent lamp: LS-T③
			1NC	—	FA	NC	YW1L-MF2E01Q③②		
			2NO	NO	FA	NO	YW1L-MF2E20Q③②		
			2NC	NC	FA	NC	YW1L-MF2E02Q③②		
			1NO-1NC	NO	FA	NC	YW1L-MF2E11Q③②		
		Maintained	1NO	NO	FA	—	YW1L-AF2E10Q③②		
			1NC	—	FA	NC	YW1L-AF2E01Q③②		
			2NO	NO	FA	NO	YW1L-AF2E20Q③②		
			2NC	NC	FA	NC	YW1L-AF2E02Q③②		
			1NO-1NC	NO	FA	NC	YW1L-AF2E11Q③②		

Note: Specify a lens color code in place of ② in the Part No.
Specify an operating voltage code in place of ③ in the Part No.

FA: Full voltage adapter

APEM
Switches & Pilot Lights
Control Boxes
Emergency Stop Switches
Enabling Switches
Safety Products
Explosion Proof
Terminal Blocks
Relays & Sockets
Circuit Protectors
Power Supplies
LED Illumination
Controllers
Operator Interfaces
Sensors
AUTO-ID
Flush Silhouette
ø16
ø22
ø30
Miniature
Pilot Lights
HW
TW
YW

ø22 YW Series Switches & Pilot Lights

Illuminated Pushbuttons with Plastic Bezel

Package Quantity: 1

Shape	Lamp	Operation	Contact	Contact Block Mounting Position 1	2	3	Part No.	③ Operating Voltage Code	② Lens Color Code
Mushroom ø40mm	Without Lamp	Momentary	1NO	NO	FA	—	YW1L-M4E10Q0②	0: without lamp 250V AC/DC max.	A: amber G: green R: red S: blue W: white Y: yellow
			1NC	—	FA	NC	YW1L-M4E01Q0②		
			2NO	NO	FA	NO	YW1L-M4E20Q0②		
			2NC	NC	FA	NC	YW1L-M4E02Q0②		
			1NO-1NC	NO	FA	NC	YW1L-M4E11Q0②		
		Maintained	1NO	NO	FA	—	YW1L-A4E10Q0②		
			1NC	—	FA	NC	YW1L-A4E01Q0②		
			2NO	NO	FA	NO	YW1L-A4E20Q0②		
			2NC	NC	FA	NC	YW1L-A4E02Q0②		
			1NO-1NC	NO	FA	NC	YW1L-A4E11Q0②		
	LED	Momentary	1NO	NO	FA	—	YW1L-M4E10Q③②	2: 6V AC/DC 3: 12V AC/DC 4: 24V AC/DC H: 110V AC/DC M3: 230/240V AC/DC	A: amber G: green PW: pure white R: red S: blue W: white Y: yellow Built-in LED lamp: LSED-③②N
			1NC	—	FA	NC	YW1L-M4E01Q③②		
			2NO	NO	FA	NO	YW1L-M4E20Q③②		
			2NC	NC	FA	NC	YW1L-M4E02Q③②		
			1NO-1NC	NO	FA	NC	YW1L-M4E11Q③②		
		Maintained	1NO	NO	FA	—	YW1L-A4E10Q③②		
			1NC	—	FA	NC	YW1L-A4E01Q③②		
			2NO	NO	FA	NO	YW1L-A4E20Q③②		
			2NC	NC	FA	NC	YW1L-A4E02Q③②		
			1NO-1NC	NO	FA	NC	YW1L-A4E11Q③②		
	Incandescent	Momentary	1NO	NO	FA	—	YW1L-M4E10Q③②	5: 6V AC/DC 6:12V AC/DC 7:24V AC/DC	A: amber G: green R: red S: blue W: white Y: yellow Built-in incandescent lamp: LS-T③
			1NC	—	FA	NC	YW1L-M4E01Q③②		
			2NO	NO	FA	NO	YW1L-M4E20Q③②		
			2NC	NC	FA	NC	YW1L-M4E02Q③②		
			1NO-1NC	NO	FA	NC	YW1L-M4E11Q③②		
		Maintained	1NO	NO	FA	—	YW1L-A4E10Q③②		
			1NC	—	FA	NC	YW1L-A4E01Q③②		
			2NO	NO	FA	NO	YW1L-A4E20Q③②		
			2NC	NC	FA	NC	YW1L-A4E02Q③②		
			1NO-1NC	NO	FA	NC	YW1L-A4E11Q③②		

Note: Specify a lens color code in place of ② in the Part No.
Specify an operating voltage code in place of ③ in the Part No.

FA: Full voltage adapter

Dimensions (Illuminated Pushbuttons with Plastic Bezel)

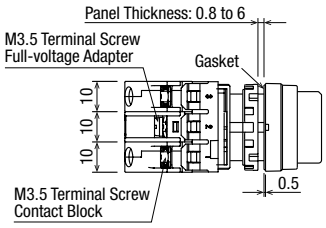

Contact Block Mounting Position

Extended

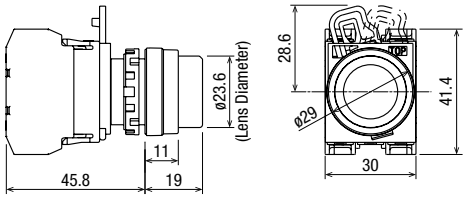

Mushroom

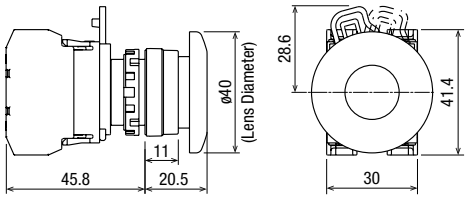

Extended with Full Shroud

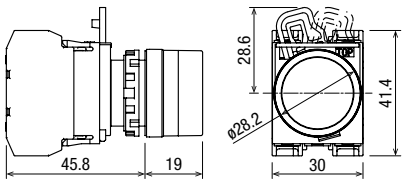

All dimensions in mm.

Illuminated Pushbuttons with Metal Bezel

Package Quantity: 1

Shape	Lamp	Operation	Contact	Contact Block Mounting Position 1	2	3	Part No.	③ Operating Voltage Code	② Lens Color Code
Extended	Without Lamp	Momentary	1NO	NO	FA	—	YW4L-M2E10Q0②	0: without lamp 250V AC/DC max.	A: amber G: green R: red S: blue W: white Y: yellow
			1NC	—	FA	NC	YW4L-M2E01Q0②		
			2NO	NO	FA	NO	YW4L-M2E20Q0②		
			2NC	NC	FA	NC	YW4L-M2E02Q0②		
			1NO-1NC	NO	FA	NC	YW4L-M2E11Q0②		
		Maintained	1NO	NO	FA	—	YW4L-A2E10Q0②		
			1NC	—	FA	NC	YW4L-A2E01Q0②		
			2NO	NO	FA	NO	YW4L-A2E20Q0②		
			2NC	NC	FA	NC	YW4L-A2E02Q0②		
			1NO-1NC	NO	FA	NC	YW4L-A2E11Q0②		
	LED	Momentary	1NO	NO	FA	—	YW4L-M2E10Q③②	2: 6V AC/DC 3: 12V AC/DC 4: 24V AC/DC H: 110V AC/DC M3: 230/240V AC/DC	A: amber G: green PW: pure white R: red S: blue W: white Y: yellow Built-in LED lamp: LSED-③②N
			1NC	—	FA	NC	YW4L-M2E01Q③②		
			2NO	NO	FA	NO	YW4L-M2E20Q③②		
			2NC	NC	FA	NC	YW4L-M2E02Q③②		
			1NO-1NC	NO	FA	NC	YW4L-M2E11Q③②		
		Maintained	1NO	NO	FA	—	YW4L-A2E10Q③②		
			1NC	—	FA	NC	YW4L-A2E01Q③②		
			2NO	NO	FA	NO	YW4L-A2E20Q③②		
			2NC	NC	FA	NC	YW4L-A2E02Q③②		
			1NO-1NC	NO	FA	NC	YW4L-A2E11Q③②		
	Incandescent	Momentary	1NO	NO	FA	—	YW4L-M2E10Q③②	5: 6V AC/DC 6: 12V AC/DC 7: 24V AC/DC	A: amber G: green R: red S: blue W: white Y: yellow Built-in incandescent lamp: LS-T③
			1NC	—	FA	NC	YW4L-M2E01Q③②		
			2NO	NO	FA	NO	YW4L-M2E20Q③②		
			2NC	NC	FA	NC	YW4L-M2E02Q③②		
			1NO-1NC	NO	FA	NC	YW4L-M2E11Q③②		
		Maintained	1NO	NO	FA	—	YW4L-A2E10Q③②		
			1NC	—	FA	NC	YW4L-A2E01Q③②		
			2NO	NO	FA	NO	YW4L-A2E20Q③②		
			2NC	NC	FA	NC	YW4L-A2E02Q③②		
			1NO-1NC	NO	FA	NC	YW4L-A2E11Q③②		
Extended with Full Shroud	Without Lamp	Momentary	1NO	NO	FA	—	YW4L-MF2E10Q0②	0: without lamp 250V AC/DC max.	A: amber G: green R: red S: blue W: white Y: yellow
			1NC	—	FA	NC	YW4L-MF2E01Q0②		
			2NO	NO	FA	NO	YW4L-MF2E20Q0②		
			2NC	NC	FA	NC	YW4L-MF2E02Q0②		
			1NO-1NC	NO	FA	NC	YW4L-MF2E11Q0②		
		Maintained	1NO	NO	FA	—	YW4L-AF2E10Q0②		
			1NC	—	FA	NC	YW4L-AF2E01Q0②		
			2NO	NO	FA	NO	YW4L-AF2E20Q0②		
			2NC	NC	FA	NC	YW4L-AF2E02Q0②		
			1NO-1NC	NO	FA	NC	YW4L-AF2E11Q0②		
	LED	Momentary	1NO	NO	FA	—	YW4L-MF2E10Q③②	2: 6V AC/DC 3: 12V AC/DC 4: 24V AC/DC H: 110V AC/DC M3: 230/240V AC/DC	A: amber G: green PW: pure white R: red S: blue W: white Y: yellow Built-in LED lamp: LSED-③②N
			1NC	—	FA	NC	YW4L-MF2E01Q③②		
			2NO	NO	FA	NO	YW4L-MF2E20Q③②		
			2NC	NC	FA	NC	YW4L-MF2E02Q③②		
			1NO-1NC	NO	FA	NC	YW4L-MF2E11Q③②		
		Maintained	1NO	NO	FA	—	YW4L-AF2E10Q③②		
			1NC	—	FA	NC	YW4L-AF2E01Q③②		
			2NO	NO	FA	NO	YW4L-AF2E20Q③②		
			2NC	NC	FA	NC	YW4L-AF2E02Q③②		
			1NO-1NC	NO	FA	NC	YW4L-AF2E11Q③②		
	Incandescent	Momentary	1NO	NO	FA	—	YW4L-MF2E10Q③②	5: 6V AC/DC 6: 12V AC/DC 7: 24V AC/DC	A: amber G: green R: red S: blue W: white Y: yellow Built-in incandescent lamp: LS-T③
			1NC	—	FA	NC	YW4L-MF2E01Q③②		
			2NO	NO	FA	NO	YW4L-MF2E20Q③②		
			2NC	NC	FA	NC	YW4L-MF2E02Q③②		
			1NO-1NC	NO	FA	NC	YW4L-MF2E11Q③②		
		Maintained	1NO	NO	FA	—	YW4L-AF2E10Q③②		
			1NC	—	FA	NC	YW4L-AF2E01Q③②		
			2NO	NO	FA	NO	YW4L-AF2E20Q③②		
			2NC	NC	FA	NC	YW4L-AF2E02Q③②		
			1NO-1NC	NO	FA	NC	YW4L-AF2E11Q③②		

Note: Specify a lens color code in place of ② in the Part No.
Specify an operating voltage code in place of ③ in the Part No.

FA: Full voltage adapter

APEM
Switches & Pilot Lights
Control Boxes
Emergency Stop Switches
Enabling Switches
Safety Products
Explosion Proof
Terminal Blocks
Relays & Sockets
Circuit Protectors
Power Supplies
LED Illumination
Controllers
Operator Interfaces
Sensors
AUTO-ID
Flush Silhouette
ø16
ø22
ø30
Miniature
Pilot Lights
HW
TW
YW

Illuminated Pushbuttons with Metal Bezel

Package Quantity: 1

Style	Lamp	Operation	Contact	Contact Block Mounting Position 1	2	3	Part No.	③ Operating Voltage Code	② Lens Color Code
ø40mm Mushroom	Without Lamp	Momentary	1NO	NO	FA	—	YW4L-M4E10Q0②	0: without lamp 250V AC/DC max.	A: amber G: green R: red S: blue W: white Y: yellow
			1NC	—	FA	NC	YW4L-M4E01Q0②		
			2NO	NO	FA	NO	YW4L-M4E20Q0②		
			2NC	NC	FA	NC	YW4L-M4E02Q0②		
			1NO-1NC	NO	FA	NC	YW4L-M4E11Q0②		
		Maintained	1NO	NO	FA	—	YW4L-A4E10Q0②		
			1NC	—	FA	NC	YW4L-A4E01Q0②		
			2NO	NO	FA	NO	YW4L-A4E20Q0②		
			2NC	NC	FA	NC	YW4L-A4E02Q0②		
			1NO-1NC	NO	FA	NC	YW4L-A4E11Q0②		
	LED	Momentary	1NO	NO	FA	—	YW4L-M4E10Q③②	2: 6V AC/DC 3: 12V AC/DC 4: 24V AC/DC H: 110V AC/DC M3: 230/240V AC/DC	A: amber G: green PW: pure white R: red S: blue W: white Y: yellow Built-in LED lamp: LSED-③②N
			1NC	—	FA	NC	YW4L-M4E01Q③②		
			2NO	NO	FA	NO	YW4L-M4E20Q③②		
			2NC	NC	FA	NC	YW4L-M4E02Q③②		
			1NO-1NC	NO	FA	NC	YW4L-M4E11Q③②		
		Maintained	1NO	NO	FA	—	YW4L-A4E10Q③②		
			1NC	—	FA	NC	YW4L-A4E01Q③②		
			2NO	NO	FA	NO	YW4L-A4E20Q③②		
			2NC	NC	FA	NC	YW4L-A4E02Q③②		
			1NO-1NC	NO	FA	NC	YW4L-A4E11Q③②		
	Incandescent	Momentary	1NO	NO	FA	—	YW4L-M4E10Q③②	5: 6V AC/DC 6: 12V AC/DC 7: 24V AC/DC	A: amber G: green R: red S: blue W: white Y: yellow Built-in incandescent lamp: LS-T③
			1NC	—	FA	NC	YW4L-M4E01Q③②		
			2NO	NO	FA	NO	YW4L-M4E20Q③②		
			2NC	NC	FA	NC	YW4L-M4E02Q③②		
			1NO-1NC	NO	FA	NC	YW4L-M4E11Q③②		
		Maintained	1NO	NO	FA	—	YW4L-A4E10Q③②		
			1NC	—	FA	NC	YW4L-A4E01Q③②		
			2NO	NO	FA	NO	YW4L-A4E20Q③②		
			2NC	NC	FA	NC	YW4L-A4E02Q③②		
			1NO-1NC	NO	FA	NC	YW4L-A4E11Q③②		

Note: Specify a lens color code in place of ② in the Part No.
Specify an operating voltage code in place of ③ in the Part No.

FA: Full voltage adapter

Dimensions (Illuminated Pushbutton with Metal Bezel)

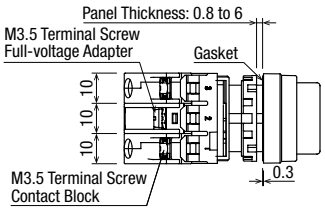

Contact Block Mounting Position

Extended

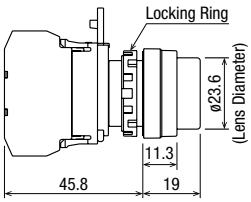

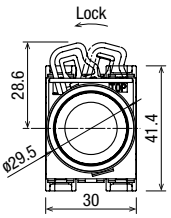

Mushroom

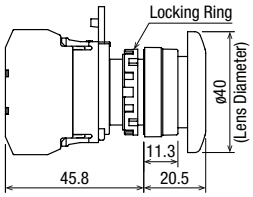

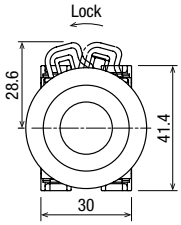

Extended with Full Shroud

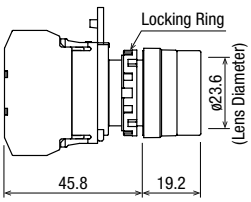

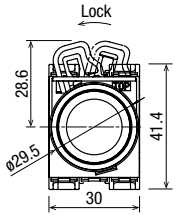

All dimensions in mm.

Selector Switches with Plastic Bezel

Package Quantity: 1

Shape

Knob

No. of Positions	Contact Configuration	Contact Block Mounting Position		Operator Position L	Operator Position R	Operator Position –	Maintained	Spring Return from Right	—	—
90° 2-Position (L, R)	1NO (10)	1	NO		●		YW1S-2E10	YW1S-21E10	—	—
		2								
		3								
	1NC (01)	1					YW1S-2E01	YW1S-21E01	—	—
		2								
		3	NC	●						
	2NO (20)	1	NO		●		YW1S-2E20	YW1S-21E20	—	—
		2								
		3	NO		●					
	2NC (02)	1	NC	●			YW1S-2E02	YW1S-21E02	—	—
		2								
		3	NC	●						
	1NO-1NC (11)	1	NO		●		YW1S-2E11	YW1S-21E11	—	—
		2								
		3	NC	●						
	3NO (30)	1	NO		●		YW1S-2E30	YW1S-21E30	—	—
		2	NO		●					
		3	NO		●					
	3NC (03)	1	NC	●			YW1S-2E03	YW1S-21E03	—	—
		2	NC	●						
		3	NC	●						
	2NO-1NC (21)	1	NO		●		YW1S-2E21	YW1S-21E21	—	—
		2	NC	●						
		3	NO		●					
	1NO-2NC (12)	1	NO		●		YW1S-2E12	YW1S-21E12	—	—
		2	NC	●						
		3	NC	●						

No. of Positions	Contact Configuration	Contact Block Mounting Position		Operator Position L	Operator Position C	Operator Position R	Maintained	Spring Return from Right	Spring Return from Left	Spring Return Two-Way
45° 3-Position (L, C, R)	2NO (20)	1	NO	●			YW1S-3E20	YW1S-31E20	YW1S-32E20	YW1S-33E20
		2								
		3	NO			●				
	2NO (20N1)	1					YW1S-3E20N1	YW1S-31E20N1	YW1S-32E20N1	YW1S-33E20N1
		2	NO	●		●				
		3	NO			●				
	2NC (02)	1	NC		▬	▬	YW1S-3E02	YW1S-31E02	YW1S-32E02	YW1S-33E02
		2								
		3	NC	▬	▬					
	2NC (02N1)	1					YW1S-3E02N1	YW1S-31E02N1	YW1S-32E02N1	YW1S-33E02N1
		2	NC		●					
		3	NC	▬	▬					
	1NO-1NC (11)	1	NO	●			YW1S-3E11	YW1S-31E11	YW1S-32E11	YW1S-33E11
		2								
		3	NC	▬	▬					
	1NO-1NC (11N1)	1	NC		▬	▬	YW1S-3E11N1	YW1S-31E11N1	YW1S-32E11N1	YW1S-33E11N1
		2								
		3	NO			●				
	1NO-1NC (11N2)	1	NO	●			YW1S-3E11N2	YW1S-31E11N2	YW1S-32E11N2	YW1S-33E11N2
		2	NC		●					
		3								
	1NO-1NC (11N3)	1					YW1S-3E11N3	YW1S-31E11N3	YW1S-32E11N3	YW1S-33E11N3
		2	NC		●					
		3	NO			●				
	1NO-1NC (11N4)	1					YW1S-3E11N4	YW1S-31E11N4	YW1S-32E11N4	YW1S-33E11N4
		2	NO	●		●				
		3	NC	▬	▬					
	3NO (30)	1	NO	●			YW1S-3E30	YW1S-31E30	YW1S-32E30	YW1S-33E30
		2	NO	●		●				
		3	NO			●				
	3NC (03)	1	NC		▬	▬	YW1S-3E03	YW1S-31E03	YW1S-32E03	YW1S-33E03
		2	NC		●					
		3	NC	▬	▬					
	2NO-1NC (21)	1	NO	●			YW1S-3E21	YW1S-31E21	YW1S-32E21	YW1S-33E21
		2	NC		●					
		3	NO			●				
	1NO-2NC (12)	1	NC		▬	▬	YW1S-3E12	YW1S-31E12	YW1S-32E12	YW1S-33E12
		2	NO	●		●				
		3	NC	▬	▬					

ø22 YW Series Switches & Pilot Lights

Selector Switches with Metal Bezel

Package Quantity: 1

Shape

Knob

No. of Positions	Contact Configuration	Contact Block Mounting Position		Operator Position L	Operator Position R	Operator Position –	Maintained	Spring Return from Right	—	—
90° 2-Position (L, R)	1NO (10)	1	NO		●		YW4S-2E10	YW4S-21E10	—	—
		2								
		3								
	1NC (01)	1					YW4S-2E01	YW4S-21E01	—	—
		2								
		3	NC	●						
	2NO (20)	1	NO		●		YW4S-2E20	YW4S-21E20	—	—
		2								
		3	NO		●					
	2NC (02)	1	NC	●			YW4S-2E02	YW4S-21E02	—	—
		2								
		3	NC	●						
	1NO-1NC (11)	1	NO		●		YW4S-2E11	YW4S-21E11	—	—
		2								
		3	NC	●						
	3NO (30)	1	NO		●		YW4S-2E30	YW4S-21E30	—	—
		2	NO		●					
		3	NO		●					
	3NC (03)	1	NC	●			YW4S-2E03	YW4S-21E03	—	—
		2	NC	●						
		3	NC	●						
	2NO-1NC (21)	1	NO		●		YW4S-2E21	YW4S-21E21	—	—
		2	NC	●						
		3	NO		●					
	1NO-2NC (12)	1	NO		●		YW4S-2E12	YW4S-21E12	—	—
		2	NC	●						
		3	NC	●						

No. of Positions	Contact Configuration	Contact Block Mounting Position		Operator Position L	Operator Position C	Operator Position R	Maintained	Spring Return from Right	Spring Return from Left	Spring Return Two-Way
45° 3-Position (L, C, R)	2NO (20)	1	NO	●			YW4S-3E20	YW4S-31E20	YW4S-32E20	YW4S-33E20
		2								
		3	NO			●				
	2NO (20N1)	1					YW4S-3E20N1	YW4S-31E20N1	YW4S-32E20N1	YW4S-33E20N1
		2	NO	●		●				
		3	NO			●				
	2NC (02)	1	NC		▬	▬	YW4S-3E02	YW4S-31E02	YW4S-32E02	YW4S-33E02
		2								
		3	NC	▬	▬					
	2NC (02N1)	1					YW4S-3E02N1	YW4S-31E02N1	YW4S-32E02N1	YW4S-33E02N1
		2	NC		●					
		3	NC	▬	▬					
	1NO-1NC (11)	1	NO	●			YW4S-3E11	YW4S-31E11	YW4S-32E11	YW4S-33E11
		2								
		3	NC	▬	▬					
	1NO-1NC (11N1)	1	NC		▬	▬	YW4S-3E11N1	YW4S-31E11N1	YW4S-32E11N1	YW4S-33E11N1
		2								
		3	NO			●				
	1NO-1NC (11N2)	1	NO	●			YW4S-3E11N2	YW4S-31E11N2	YW4S-32E11N2	YW4S-33E11N2
		2	NC		●					
		3								
	1NO-1NC (11N3)	1					YW4S-3E11N3	YW4S-31E11N3	YW4S-32E11N3	YW4S-33E11N3
		2	NC		●					
		3	NO			●				
	1NO-1NC (11N4)	1					YW4S-3E11N4	YW4S-31E11N4	YW4S-32E11N4	YW4S-33E11N4
		2	NO	●		●				
		3	NC	▬	▬					
	3NO (30)	1	NO	●			YW4S-3E30	YW4S-31E30	YW4S-32E30	YW4S-33E30
		2	NO	●		●				
		3	NO			●				
	3NC (03)	1	NC		▬	▬	YW4S-3E03	YW4S-31E03	YW4S-32E03	YW4S-33E03
		2	NC		●					
		3	NC	▬	▬					
	2NO-1NC (21)	1	NO	●			YW4S-3E21	YW4S-31E21	YW4S-32E21	YW4S-33E21
		2	NC		●					
		3	NO			●				
	1NO-2NC (12)	1	NC		▬	▬	YW4S-3E12	YW4S-31E12	YW4S-32E12	YW4S-33E12
		2	NO	●		●				
		3	NC	▬	▬					

Dimensions

All dimensions in mm

Selector Switch with Plastic Bezel

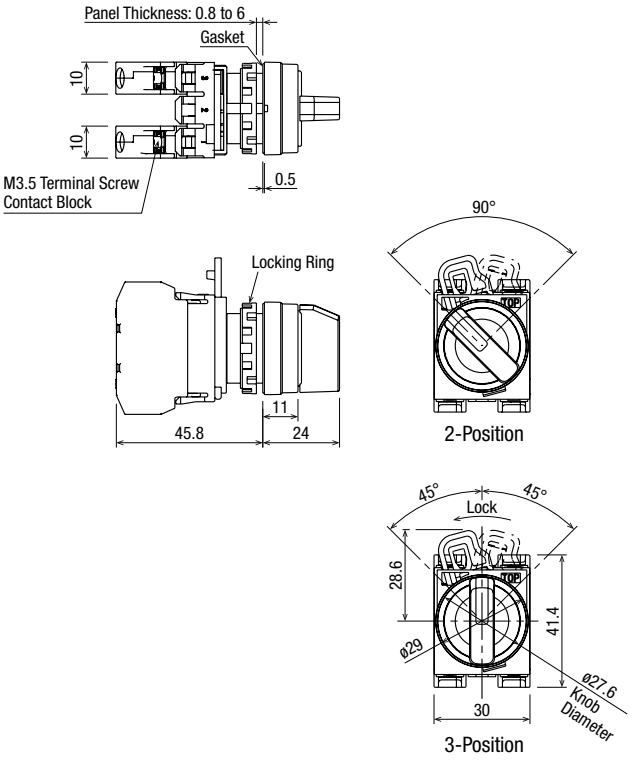

Selector Switch with Metal Bezel

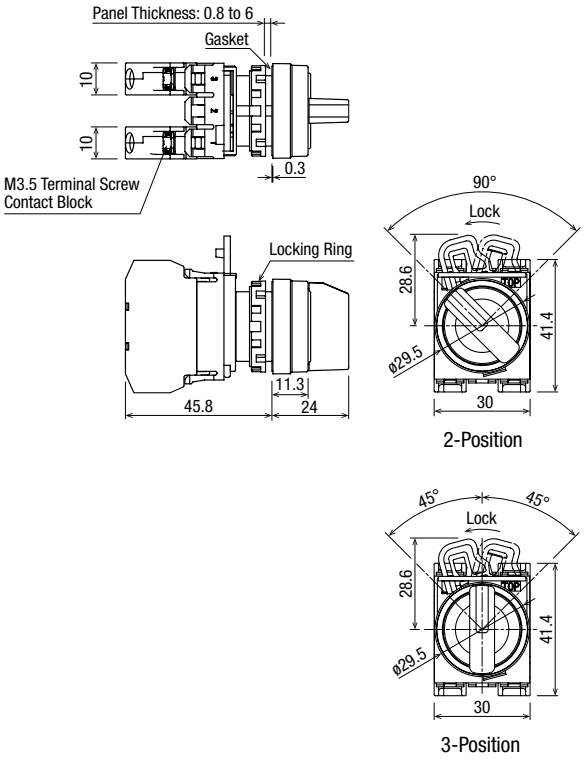

Contact Block Mounting Position

Selector Switch with Plastic Bezel

Contact Block Mounting Position

Operator Position

Selector Switch with Metal Bezel

Contact Block Mounting Position

Operator Position

APEM
Switches & Pilot Lights
Control Boxes
Emergency Stop Switches
Enabling Switches
Safety Products
Explosion Proof
Terminal Blocks
Relays & Sockets
Circuit Protectors
Power Supplies
LED Illumination
Controllers
Operator Interfaces
Sensors
AUTO-ID
Flush Silhouette
ø16
ø22
ø30
Miniature
Pilot Lights
HW
TW
YW

ø22 YW Series Switches & Pilot Lights

Key Selector Switches (90° 2-Position)

Package Quantity: 1

No. of Positions	Contact Configuration	Contact Block Mounting Position		Operator Position		Part No.	
						Plastic Bezel	Metal Bezel
				L	R		
90° 2-position Maintained	1NO (10)	1	NO		●	YW1K-2AE10	YW4K-2AE10
		2					
		3					
	1NC (01)	1				YW1K-2AE01	YW4K-2AE01
		2					
		3	NC	●			
	2NO (20)	1	NO		●	YW1K-2AE20	YW4K-2AE20
		2					
		3	NO		●		
	2NC (02)	1	NC	●		YW1K-2AE02	YW4K-2AE02
		2					
		3	NC	●			
	1NO-1NC (11)	1	NO		●	YW1K-2AE11	YW4K-2AE11
		2					
		3	NC	●			
	3NO (30)	1	NO		●	YW1K-2AE30	YW4K-2AE30
		2	NO		●		
		3	NO		●		
	3NC (03)	1	NC	●		YW1K-2AE03	YW4K-2AE03
		2	NC	●			
		3	NC	●			
	2NO-1NC (21)	1	NO		●	YW1K-2AE21	YW4K-2AE21
		2	NC	●			
		3	NO		●		
	1NO-2NC (12)	1	NO		●	YW1K-2AE12	YW4K-2AE12
		2	NC	●			
		3	NC	●			
90° 2-position Spring Return from Right 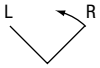	1NO (10)	1	NO		●	YW1K-21BE10	YW4K-21BE10
		2					
		3					
	1NC (01)	1				YW1K-21BE01	YW4K-21BE01
		2					
		3	NC	●			
	2NO (20)	1	NO		●	YW1K-21BE20	YW4K-21BE20
		2					
		3	NO		●		
	2NC (02)	1	NC	●		YW1K-21BE02	YW4K-21BE02
		2					
		3	NC	●			
	1NO-1NC (11)	1	NO		●	YW1K-21BE11	YW4K-21BE11
		2					
		3	NC	●			
	3NO (30)	1	NO		●	YW1K-21BE30	YW4K-21BE30
		2	NO		●		
		3	NO		●		
	3NC (03)	1	NC	●		YW1K-21BE03	YW4K-21BE03
		2	NC	●			
		3	NC	●			
	2NO-1NC (21)	1	NO		●	YW1K-21BE21	YW4K-21BE21
		2	NC	●			
		3	NO		●		
	1NO-2NC (12)	1	NO		●	YW1K-21BE12	YW4K-21BE12
		2	NC	●			
		3	NC	●			

- On the spring-returned types, the key can be removed only from the maintained position. On the maintained types, the key can be removed from every position. Key retained positions are also available. See Part No. Development shown on B-288.
- Each key selector switch is supplied with two identical keys.

Key Selector Switches (45° 3-Position)

Package Quantity: 1

No. of Positions	Contact Configuration	Contact Block Mounting Position		Operator Position L	Operator Position C	Operator Position R	Part No. Plastic Bezel	Part No. Metal Bezel
45° 3-position Maintained	2NO (20)	1	NO	●			YW1K-3AE20	YW4K-3AE20
		2						
		3	NO			●		
	2NO (20N1)	1					YW1K-3AE20N1	YW4K-3AE20N1
		2	NO	●		●		
		3	NO			●		
	2NC (02)	1	NC		▬	▬	YW1K-3AE02	YW4K-3AE02
		2						
		3	NC	▬	▬			
	2NC (02N1)	1					YW1K-3AE02N1	YW4K-3AE02N1
		2	NC		●			
		3	NC	▬	▬			
	1NO-1NC (11)	1	NO	●			YW1K-3AE11	YW4K-3AE11
		2						
		3	NC	▬	▬			
	1NO-1NC (11N1)	1	NC		▬	▬	YW1K-3AE11N1	YW4K-3AE11N1
		2						
		3	NO			●		
	1NO-1NC (11N2)	1	NO	●			YW1K-3AE11N2	YW4K-3AE11N2
		2	NC		●			
		3						
	1NO-1NC (11N3)	1					YW1K-3AE11N3	YW4K-3AE11N3
		2	NC		●			
		3	NO			●		
	1NO-1NC (11N4)	1					YW1K-3AE11N4	YW4K-3AE11N4
		2	NO	●		●		
		3	NC	▬	▬			
	3NO (30)	1	NO	●			YW1K-3AE30	YW4K-3AE30
		2	NO	●		●		
		3	NO			●		
	3NC (03)	1	NC		▬	▬	YW1K-3AE03	YW4K-3AE03
		2	NC		●			
		3	NC	▬	▬			
	2NO-1NC (21)	1	NO	●			YW1K-3AE21	YW4K-3AE21
		2	NC		●			
		3	NO			●		
	1NO-2NC (12)	1	NC		▬	▬	YW1K-3AE12	YW4K-3AE12
		2	NO	●		●		
		3	NC	▬	▬			

- On the maintained types, the key can be removed from every position. Key retained positions are also available. See Part No. Development below.
- Each key selector switch is supplied with two identical keys.

Part No. Development

YW1K-2 A E21

Key removal position code

2-position
- A: Removable in all positions
- B: Removable in left only
- C: Removable in right only

3-position
- A: Removable in all positions
- B: Removable in left and center
- C: Removable in right and center
- D: Removable in center only
- E: Removable in right and left
- G: Removable in left only
- H: Removable in right only

Contact Block Mounting Position

Contact Block Mounting Position

Operator Position

APEM
Switches & Pilot Lights
Control Boxes
Emergency Stop Switches
Enabling Switches
Safety Products
Explosion Proof
Terminal Blocks
Relays & Sockets
Circuit Protectors
Power Supplies
LED Illumination
Controllers
Operator Interfaces
Sensors
AUTO-ID
Flush Silhouette
ø16
ø22
ø30
Miniature
Pilot Lights
HW
TW
YW

ø22 YW Series Switches & Pilot Lights

Key Selector Switches (45° 3-Position)

Package Quantity: 1

No. of Positions	Contact Configuration	Contact Block Mounting Position		Operator Position L	Operator Position C	Operator Position R	Part No. Plastic Bezel	Part No. Metal Bezel
45° 3-position Spring Return from Right	2NO (20)	1	NO	●			YW1K-31BE20	YW4K-31BE20
		2						
		3	NO			●		
	2NO (20N1)	1					YW1K-31BE20N1	YW4K-31BE20N1
		2	NO	●		●		
		3	NO			●		
	2NC (02)	1	NC		▬	▬	YW1K-31BE02	YW4K-31BE02
		2						
		3	NC	▬	▬			
	2NC (02N1)	1					YW1K-31BE02N1	YW4K-31BE02N1
		2	NC		●			
		3	NC	▬	▬			
	1NO-1NC (11)	1	NO	●			YW1K-31BE11	YW4K-31BE11
		2						
		3	NC	▬	▬			
	1NO-1NC (11N1)	1	NC		▬	▬	YW1K-31BE11N1	YW4K-31BE11N1
		2						
		3	NO			●		
	1NO-1NC (11N2)	1	NO	●			YW1K-31BE11N2	YW4K-31BE11N2
		2	NC		●			
		3						
	1NO-1NC (11N3)	1					YW1K-31BE11N3	YW4K-31BE11N3
		2	NC		●			
		3	NO			●		
	1NO-1NC (11N4)	1					YW1K-31BE11N4	YW4K-31BE11N4
		2	NO	●		●		
		3	NC	▬	▬			
	3NO (30)	1	NO	●			YW1K-31BE30	YW4K-31BE30
		2	NO	●		●		
		3	NO			●		
	3NC (03)	1	NC		▬	▬	YW1K-31BE03	YW4K-31BE03
		2	NC		●			
		3	NC	▬	▬			
	2NO-1NC (21)	1	NO	●			YW1K-31BE21	YW4K-31BE21
		2	NC		●			
		3	NO			●		
	1NO-2NC (12)	1	NC		▬	▬	YW1K-31BE12	YW4K-31BE12
		2	NO	●		●		
		3	NC	▬	▬			

- On the spring-returned types, the key can be removed only from the maintained position. Key retained positions are also available. See Part No. Development shown on B-288.
- Each key selector switch is supplied with two identical keys.

Key Selector Switches (45° 3-Position)

Package Quantity: 1

No. of Positions	Contact Configuration	Contact Block Mounting Position		Operator Position L	Operator Position C	Operator Position R	Part No. Plastic Bezel	Part No. Metal Bezel
45° 3-position Spring Return from Left	2NO (20)	1	NO	●			YW1K-32CE20	YW4K-32CE20
		2						
		3	NO			●		
	2NO (20N1)	1					YW1K-32CE20N1	YW4K-32CE20N1
		2	NO	●		●		
		3	NO			●		
	2NC (02)	1	NC		▬	▬	YW1K-32CE02	YW4K-32CE02
		2						
		3	NC	▬	▬			
	2NC (02N1)	1					YW1K-32CE02N1	YW4K-32CE02N1
		2	NC		●			
		3	NC	▬	▬			
	1NO-1NC (11)	1	NO	●			YW1K-32CE11	YW4K-32CE11
		2						
		3	NC	▬	▬			
	1NO-1NC (11N1)	1	NC		▬	▬	YW1K-32CE11N1	YW4K-32CE11N1
		2						
		3	NO			●		
	1NO-1NC (11N2)	1	NO	●			YW1K-32CE11N2	YW4K-32CE11N2
		2	NC		●			
		3						
	1NO-1NC (11N3)	1					YW1K-32CE11N3	YW4K-32CE11N3
		2	NC		●			
		3	NO			●		
	1NO-1NC (11N4)	1					YW1K-32CE11N4	YW4K-32CE11N4
		2	NO	●		●		
		3	NC	▬	▬			
	3NO (30)	1	NO	●			YW1K-32CE30	YW4K-32CE30
		2	NO	●		●		
		3	NO			●		
	3NC (03)	1	NC		▬	▬	YW1K-32CE03	YW4K-32CE03
		2	NC		●			
		3	NC	▬	▬			
	2NO-1NC (21)	1	NO	●			YW1K-32CE21	YW4K-32CE21
		2	NC		●			
		3	NO			●		
	1NO-2NC (12)	1	NC		▬	▬	YW1K-32CE12	YW4K-32CE12
		2	NO	●		●		
		3	NC	▬	▬			

- On the spring-returned types, the key can be removed only from the maintained position. Key retained positions are also available. See Part No. Development shown on B-288.
- Each key selector switch is supplied with two identical keys.

ø22 YW Series Switches & Pilot Lights

Key Selector Switches (45° 3-Position)

Package Quantity: 1

No. of Positions	Contact Configuration	Contact Block Mounting Position		Operator Position L	Operator Position C	Operator Position R	Part No. Plastic Bezel	Part No. Metal Bezel
45° 3-position Spring Return Two-way	2NO (20)	1	NO	●			YW1K-33DE20	YW4K-33DE20
		2						
		3	NO			●		
	2NO (20N1)	1					YW1K-33DE20N1	YW4K-33DE20N1
		2	NO	●		●		
		3	NO			●		
	2NC (02)	1	NC		▬	▬	YW1K-33DE02	YW4K-33DE02
		2						
		3	NC	▬	▬			
	2NC (02N1)	1					YW1K-33DE02N1	YW4K-33DE02N1
		2	NC		●			
		3	NC	▬	▬			
	1NO-1NC (11)	1	NO	●			YW1K-33DE11	YW4K-33DE11
		2						
		3	NC	▬	▬			
	1NO-1NC (11N1)	1	NC		▬	▬	YW1K-33DE11N1	YW4K-33DE11N1
		2						
		3	NO			●		
	1NO-1NC (11N2)	1	NO	●			YW1K-33DE11N2	YW4K-33DE11N2
		2	NC		●			
		3						
	1NO-1NC (11N3)	1					YW1K-33DE11N3	YW4K-33DE11N3
		2	NC		●			
		3	NO			●		
	1NO-1NC (11N4)	1					YW1K-33DE11N4	YW4K-33DE11N4
		2	NO	●		●		
		3	NC	▬	▬			
	3NO (30)	1	NO	●			YW1K-33DE30	YW4K-33DE30
		2	NO	●		●		
		3	NO			●		
	3NC (03)	1	NC		▬	▬	YW1K-33DE03	YW4K-33DE03
		2	NC		●			
		3	NC	▬	▬			
	2NO-1NC (21)	1	NO	●			YW1K-33DE21	YW4K-33DE21
		2	NC		●			
		3	NO			●		
	1NO-2NC (12)	1	NC		▬	▬	YW1K-33DE12	YW4K-33DE12
		2	NO	●		●		
		3	NC	▬	▬			

- On the spring-returned types, the key can be removed only from the maintained position. Key retained positions are also available. See Part No. Development shown on B-288.
- Each key selector switch is supplied with two identical keys.

Dimensions

All dimensions in mm

Plastic Bezel

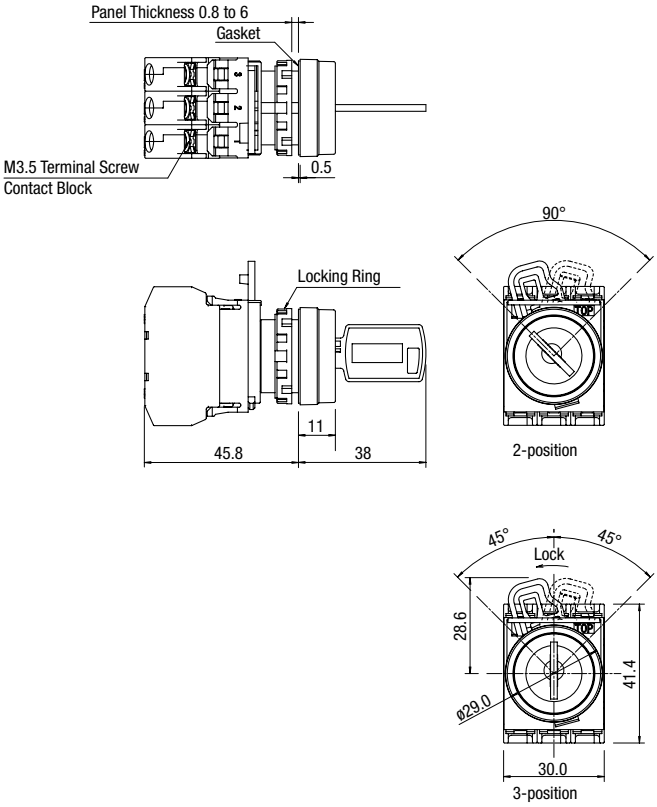

Metal Bezel

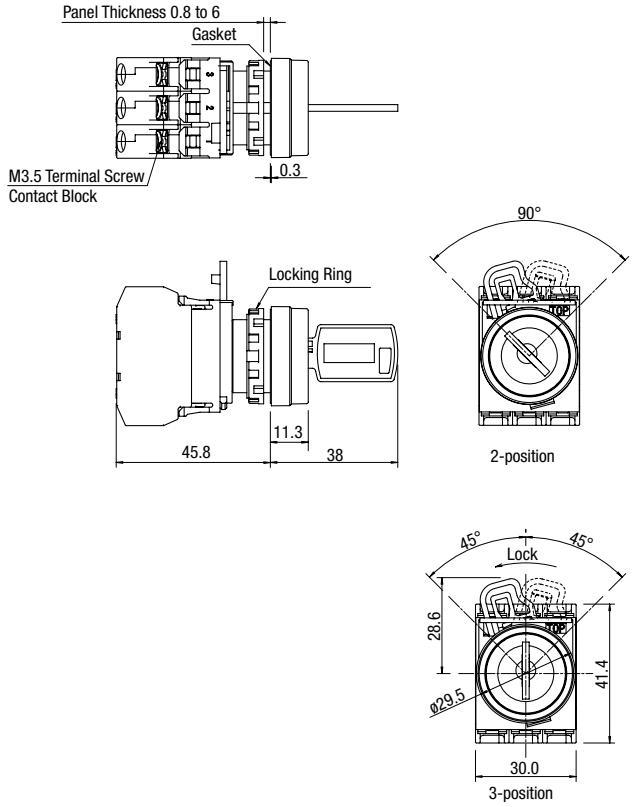

Contact Block Mounting Position

Plastic Bezel

Contact Block Mounting Position

Metal Bezel

Contact Block Mounting Position

APEM
Switches & Pilot Lights
Control Boxes
Emergency Stop Switches
Enabling Switches
Safety Products
Explosion Proof
Terminal Blocks
Relays & Sockets
Circuit Protectors
Power Supplies
LED Illumination
Controllers
Operator Interfaces
Sensors
AUTO-ID
Flush Silhouette
ø16
ø22
ø30
Miniature
Pilot Lights
HW
TW
YW

ø22 YW Series Switches & Pilot Lights

Accessories

Name & Shape	Part No.	Description & Dimensions (mm)	Package Quantity
Locking Ring Wrench	MW9Z-T1	Metallic tool used to tighten the plastic locking ring when installing the YW series in a panel. 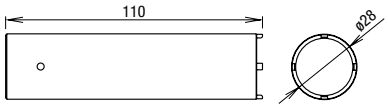	1
Lamp Holder Tool	OR-55	Made of rubber. Used for replacing lamps. 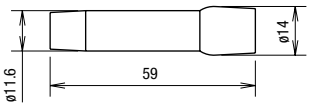	1
Rubber Mounting Hole Plug	OB-31PN05	Used for plugging unused mounting holes in the panel. Color: Black 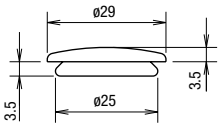	5
Metallic Mounting Hole Plug	LW9Z-BM	Used for plugging unused mounting holes in the panel. Weight: Approx. 18g 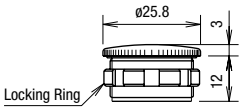	1
Anti-Rotation Ring	HW9Z-RLPN10	Prevents rotation of switches in panel. Mainly used with selector switches when no nameplate is used. With waterproof gasket (IP65). Made of plastic (black). Applicable panel thickness: 1.2 to 4.5 mm 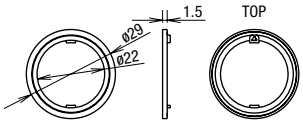	10
Padlock Cover	HW9Z-KL1	Plastic hinged cover to protect pushbuttons, illuminated pushbuttons, or selector switches. Degree of protection: IP65. Applicable panel thickness: 0.8 to 3.2 mm 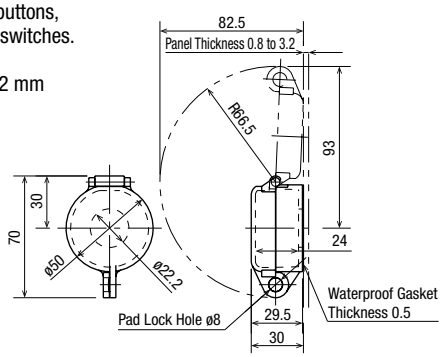	1

Maintenance Parts

Name & Shape	Part No.	Description & Dimensions (mm)			Package Quantity
Single Contact Block	YW-E10	Contact: 1NO	Color: blue	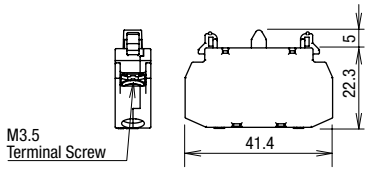	10
	YW-E01	Contact: 1NC	Color: reddish purple		
Double Contact Block	YW-EW20	Contact: 2NO	Color: blue	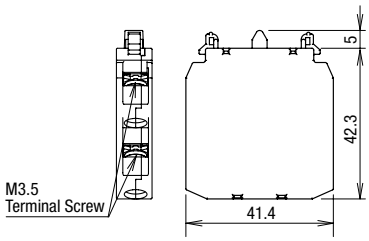 Note: Double contact blocks cannot be used on emergency stop switches.	10
	YW-EW02	Contact: 2NC	Color: reddish purple		
	YW-EW11	Contact: 1NO-1NC	Color: blue and reddish purple		
LED Lamp	LSED-6②N	6V AC/DC	Specify a color code in place of ② in the Part No.: A (amber), G (green), PW (pure white), R (red), S (blue), Y (yellow) See B-271 for applicable units and rated current. Note: Yellow LED lamps are used for white illumination of pilot lights and illuminated pushbuttons. 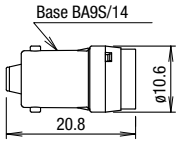		1
	LSED-1②N	12V AC/DC			
	LSED-2②N	24V AC/DC			
	LSED-H②N	110V AC/DC			
	LSED-M3②N	230/240V AC/DC			
Incandescent Lamp	LS-T6P	6.3V, 1W	One pack contains 100 incandescent lamps. 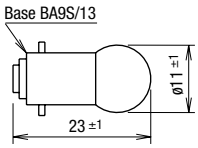		100
	LS-T8P	18V, 1W			
	LS-T3P	30V, 1W			
Spare Key	YW9Z-SK00PN02				2

ø22 YW Series Switches & Pilot Lights

Maintenance Parts

Buttons, Lenses, and Marking Plates

Name	Style	Part No.	① ② Color Code	Dimensions (mm)	Package Quantity
Button (for pushbuttons)	Extended	YW9Z-B12①PN10	B: black G: green R: red S: blue W: white Y: yellow	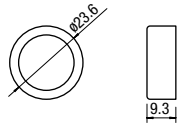	10
	Mushroom ø40mm	YW9Z-B14①PN10		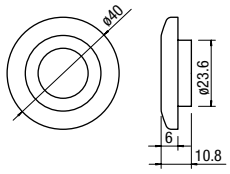	
Lens (for pilot lights)	Flush	YW9Z-PL11②PN10	A: amber C: clear G: green R: red S: blue W: white Y: yellow	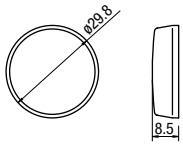	10
	Flush Marking	YW9Z-PL11B②PN10	A: amber C: clear G: green R: red S: blue Y: yellow	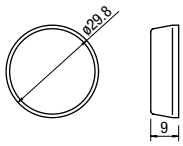	10
	Extended	YW9Z-PL12T②PN10	A: amber C: clear G: green R: red S: blue W: white Y: yellow	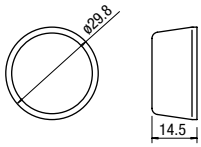	10
	Dome	YW9Z-PL12②PN10		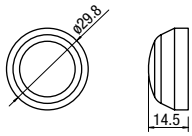	10
Lens (for illuminated pushbuttons)	Extended	YW9Z-L12②PN10	A: amber C: clear G: green R: red S: blue Y: yellow	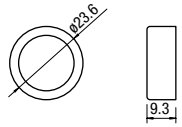	10
	Mushroom ø40mm	YW9Z-L14②PN10		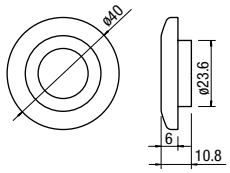	
Marking Plate (for pilot lights)	—	YW9Z-PP12PN10	—	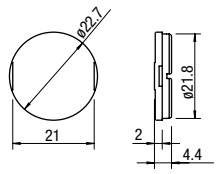	10
Marking Plate (for illuminated pushbuttons)	—	YW9Z-P12PN10	—	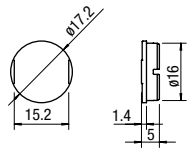	10

Nameplates

HWAM, HWAQ, HWAS, and HWAV

Name	Legend	Material	Part No.	Ordering No.	Package Quantity	Dimensions (mm)
HWAM	Order marking plate separately.	Plastic (black) 1.5 mm thick	HWAM	HWAM	1	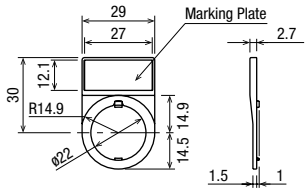
				HWAMPN10	10	
HWAQ	Order marking plate separately.	Plastic (black) 1.5 mm thick	HWAQ	HWAQ	1	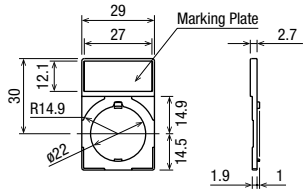
				HWAQPN10	10	
HWAQ	Blank	Plastic (black) 1.5 mm thick	HWAS-0	HWAS-0	1	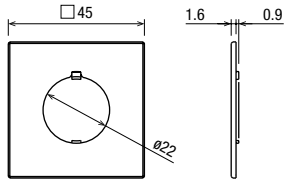
				HWAS-0PN10	10	
HWAV	Blank	Plastic (yellow) 1.5 mm thick	HWAV-0	HWAV-0	1	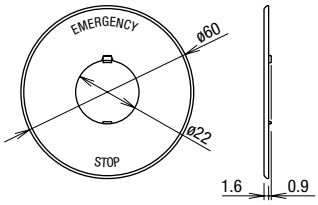 • Legend "Emergency Stop" is indicated outside a ø44mm circle.
	EMERGENCY STOP		HWAV-27	HWAV-27	1	

Making Plate

Description	Material	Part No.	Ordering No.	Package Quantity	Dimensions (mm)
HWNP	Aluminum (black) 1.0 mm thick	HWNP-∗	HWNP-∗	1	White legend on black background. 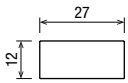
			HWNP-∗PN10	10	

• Specify a legend code in place of ∗ in the Ordering No.

Legends

Code	Legend
0	(blank)
1	ON
2	OFF
3	START
4	STOP
31	OFF-ON
35	HAND-AUTO
53	HAND-OFF-AUTO

• Installing the marking plate on a nameplate

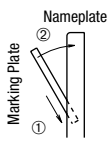

• To remove the marking plate, insert the flat screwdriver beween the marking plate and nameplate.

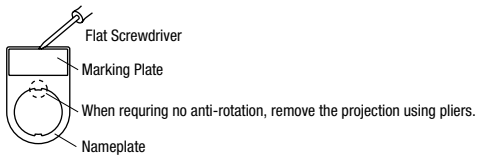

Note: When using an nameplate, the mounting panel thickness is decreased by 1.5 mm.

APEM
Switches & Pilot Lights
Control Boxes
Emergency Stop Switches
Enabling Switches
Safety Products
Explosion Proof
Terminal Blocks
Relays & Sockets
Circuit Protectors
Power Supplies
LED Illumination
Controllers
Operator Interfaces
Sensors
AUTO-ID
Flush Silhouette
ø16
ø22
ø30
Miniature
Pilot Lights
HW
TW
YW

ø22 YW Series Switches & Pilot Lights

Switch Guards

Package Quantity: 1

Part No. & Shape (mm)	Dimensions	Part No. & Shape	Dimensions (mm)
HW9Z-KG1 EMO Switch Guard SEMI S2 compliant (Note 1)	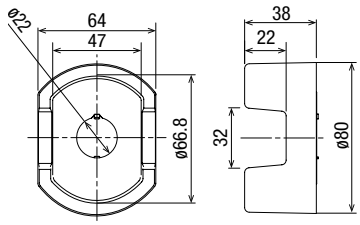	HW9Z-KG4 EMO Switch Guard SEMI S2 compliant (Note 1) SEMATECH compliant (Note 3) ISO 13850 compliant	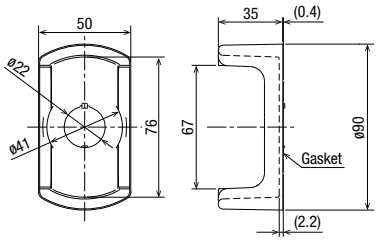
HW9Z-KG2 EMO Switch Guard SEMI S2 compliant (Note 1) SEMATECH compliant (Note 3)	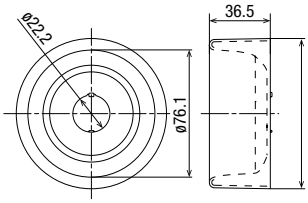	HW9Z-KG5 EMO Switch Guard SEMI S2 compliant (Note 2) SEMATECH compliant (Note 3) ISO 13850 compliant	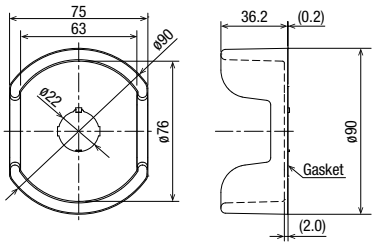
HW9Z-KG3 EMO Switch Guard SEMI S2 compliant (Note 1) ISO 13850 compliant	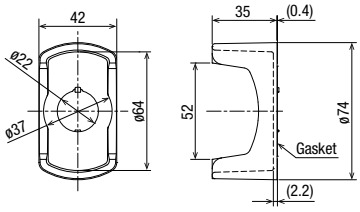		

Material: Polyamide (PA6)
Color: Yellow, Munsell 2.5Y 8/10 equivalent
Degree of protection: IP65

- Degree of protection IP65 applies to the combination of an emergency stop switch and an EMO switch guard.

Note 1: SEMI S2-0703 12.5.1 compliant.

Note 2: The combination of IDEC's emergency stop switches and EMO switch guards are approved by TÜV Rheinland for compliance with SEMI S2 standard.

Note 3: SEMATECH Application Guide for SEMI S2-93, 12.4.c. compliant.

Transformer

Din Rail Mount Transformer For 6V

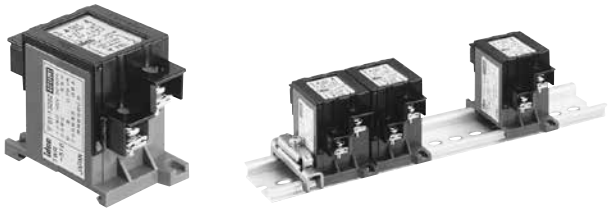

Primary Voltage (50/60 Hz)	Part No.	Applicable Lamp Rating
110V AC	TWR516	One full voltage type illuminated unit containing LED lamp LSED-6N (6V AC/DC) or incandescent lamp LS-T6 (6.3V)
115V AC	TWR5116	
120V AC	TWR5126	
220V AC	TWR526	
230V AC	TWR5236	
240V AC	TWR5246	
380V AC	TWR5386	
440V AC	TWR546	
480V AC	TWR5486	

Dimensions (mm)

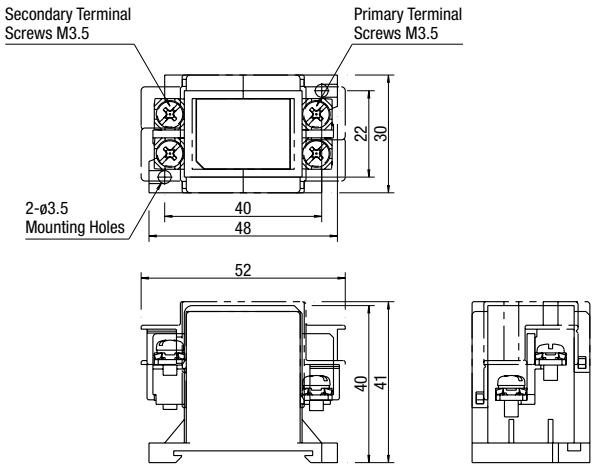

Note: Finger-safe terminal cover is supplied with the transformer.

Accessories

When ordering, specify the Ordering No.

Shape	Material	Part No.	Ordering No.	Package Quantity	Dimensions (mm)
DIN 35 mm Rail	Aluminum	BAA1000	BAA1000PN10	10	Length: 1000 mm Weight: 200g approx.
End Clip	Metal (zinc-plated steel)	BNL6	BNL6PN10	10	Applicable rail: AA1000, BAP1000 Weight: 15g approx.

• See H-071 for DIN rail products.

Safety Precautions

- Turn off the power to the YW series before starting installation, removal, wiring, maintenance, and inspection of the products. Failure to turn power off may cause electrical shocks or fire hazard.
- To avoid burning your hand, use the lamp holder tool when replacing lamps.
- For wiring, use wires of a proper size to meet the voltage and current requirements. Tighten the M3.5 terminal screws to a tightening torque of 1.0 N·m. Failure to tighten the terminal screws may cause overheating and fire.

Instructions

Panel Mounting

- Remove the contact block from the operator (for pilot lights, remove the transformer or full voltage unit from the pilot light). Remove the locking ring from the operator. Insert the operator into the panel cut-out from the front, tighten the locking ring from the back, then install the contact block to the operator.

Removing and Installing the Contact Block

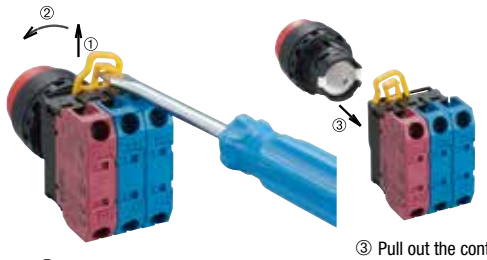

① Pull up the locking lever.
② Turn the lever to the left.
③ Pull out the contact block

1. To remove the operator from the contact block, pull up the locking lever and turn it to the left. Then the operator can be pulled out.
2. To reinstall, place the TOP marking on the operator and the TOP marking on the contact block mounting adapter in the same direction, and insert the operator into the contact block mounting adapter. Then turn the locking lever to the right.

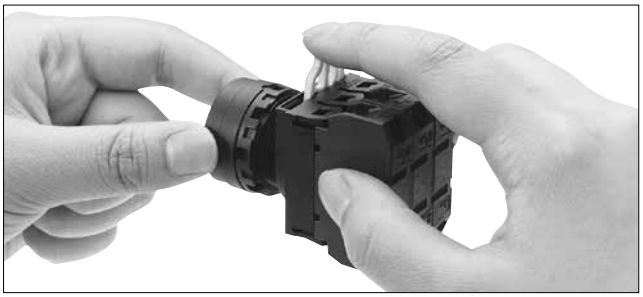

Removing and Installing the Transformer

1. Insert a flat screwdriver (5 mm wide at maximum) into the latch hole on the transformer unit as shown in the photo below, and disengage the latch. Then pull out the operator.
2. To reinstall, place the TOP marking on the operator and the latch in the same direction, and push the operator into the transformer.

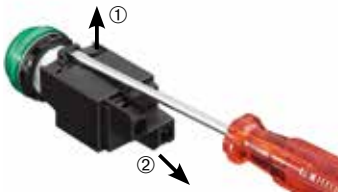

Removing the Full Voltage Unit

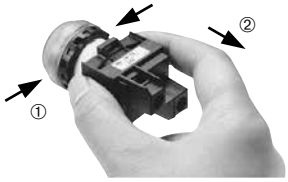

1. To remove the full voltage unit, squeeze the full voltage unit from both sides to disengage the latch as shown, and pull it out. Like the transformer unit, the full voltage unit can also be pulled out by inserting a flat screwdriver into the latch hole as shown.
2. To reinstall, place the TOP markings on the operator and the latch on the full voltage unit in the same direction, and insert the operator into the full voltage unit.

Notes for Panel Mounting

1. Use the optional locking ring wrench (MW9Z-T1) to mount the operator onto a panel. Tightening torque must not exceed 2.0 N·m. Do not use pliers. Excessive tightening will damage the locking ring.
2. For contact blocks and transformers housing LED and incandescent lamps, make sure not to press the lamps too hard, otherwise the lamp socket may be damaged.

Insertion Order of Lens and Marking Plate

Illuminated Pushbutton

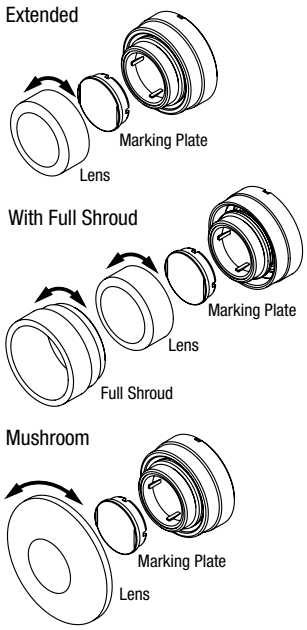

Pilot Light

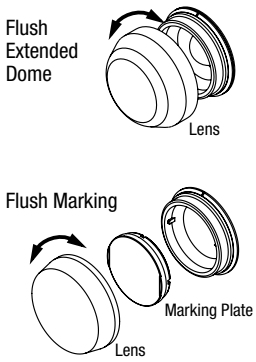

Instructions

Marking

For YW series pilot lights and illuminated pushbuttons, legends and symbols can be engraved on built-in marking plates, or printed mylar film can be inserted under the lens for labeling purposes. Mylar film is not supplied with the YW series and must be supplied by the end user.

Built-in Marking Plate and Marking Film Size

Unit	Pilot Light	Illuminated Pushbutton
Built-in Marking Plate	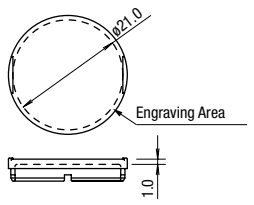	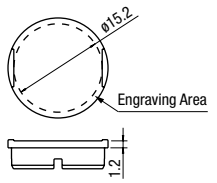
	Engraving depth: 0.5 mm maximum Marking plate material: White acrylic	
Applicable Marking Film	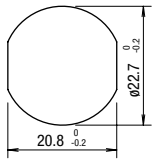	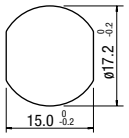
	0.1-mm-thick × 2 sheets or 0.2-mm-thick × 1 sheet Film material: Mylar (recommended) Note: Marking film is not supplied with the pilot light or illuminated pushbutton.	

Replacement (LED and incandescent lamps)

Lamps can be replaced using the lamp holder tool (OR-55) from the front of the panel, or by removing the contact block from the operator unit.

Removing the Lamp from the Front of the Panel

To remove, gently insert the lamp holder tool onto the lamp head. Then push slightly, and turn the lamp holder tool to the left.

Installing the Lamp from the Front of the Panel

1. To install, insert the lamp head into the lamp holder tool, and hold the lamp as shown in the figure below.

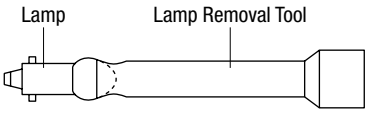

2. Place the pins on the lamp base to the grooves in the lamp socket. Insert the lamp and turn it to the right.

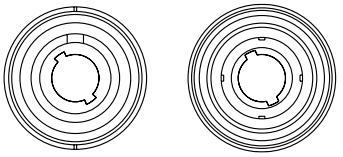

Note: LED lamps in unibody pilot lights cannot be replaced.

Removing Contact Blocks and Full Voltage Adapters

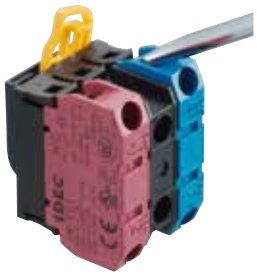

Insert a flat screwdriver between the latch and contact block mounting adapter, and disengage the latch.

Make sure to remove the lamp and contact blocks before removing the full voltage adapter.

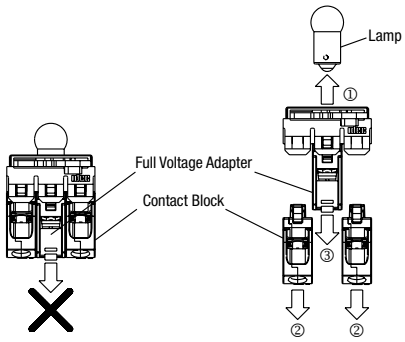

Tightening Torque for Terminal Screws

Tighten terminal screws to a torque of 1.0 N·m.

Anti-rotation Ring and Mounting Panel

Turn the TOP marking on the operator and the ▲ mark on the anti-rotation ring to the recess on the mounting panel.

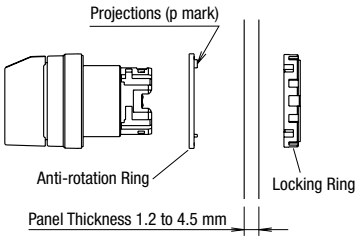

Mounting Panel Thickness

The mounting panel must be 0.8 to 6.0 mm in thickness. When optional accessories are added, the applicable panel thickness changes as shown below.

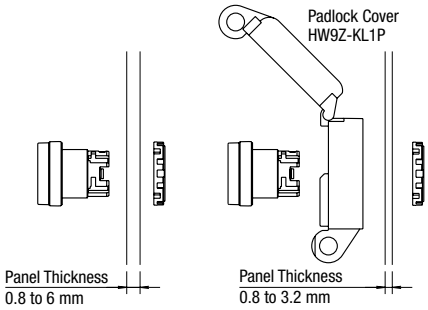

Contact Bounce

When pressing or turning the operator, the NC and NO contacts will bounce. When designing a control circuit, take the contact bounce time into consideration (reference value: 20 ms).

Instructions

Precautions for Noise

When using the unibody pilot light in an environment where it is subjected to noise, connect a noise suppressor across terminals X1 and X2 as shown below.

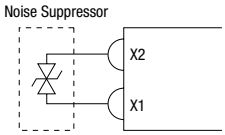

Key Selector Switch

Before operation, ensure that the key is inserted into the key hole completely. Operating the key selector switch with a loose key will cause damage to the key selector switch.

LED Illumination

LED lamps consist of semiconductors. If the applied voltage exceeds the rated voltage, LED elements deteriorate due to overheat, resulting in significant decrease in brightness, hue change, or failure of lighting. Also, if extraneous noise, transient voltage, or transient current is applied to the circuit, similar effects will be caused. When using LED lamps, observe the following instructions.

Rated Voltage

The LED illuminated units are rated at 6V, 12V, 24V, 110V, or 230/240V AC/DC, and can be used within ±10% the rated voltage of either AC or DC, except the 230/240V AC/DC types can be used on 250V AC/DC maximum.

DC Power

1. Switching power supply
   Regulated voltage from a switching power supply is best suited. Make sure to use within the rated voltage of the LED lamp.
2. Rechargeable battery
   Note that the battery voltage may exceed the rated voltage of the LED lamp while the battery is being charged and immediately after the charging is complete. Be sure to use the LED lamp on a voltage of ±10% the rated voltage, except the 230/240V AC/DC types on 250V AC/DC maximum.
3. Full-wave rectification
   Since the LED lamp is AC/DC compatible, a diode bridge for rectification is not necessary. If the LED lamp is used on a full-wave rectification current through a diode bridge, the rectifier diodes will reduce the voltage, resulting in lower brightness.
4. Single-phase half-wave rectification
   This is not suitable for the power source of LED lamps. Use constant- voltage DC power.

Noise

LED elements deteriorate due to extraneous noise, resulting in significant decrease in brightness, hue change, or failure of lighting. When such effects are anticipated, take a protection measure shown below, such as RC elements or a surge absorber.

Nameplate

When anti-rotation is not required, remove the projection from the nameplate using pliers.

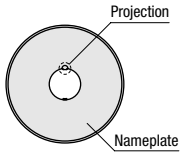

Handling

Do not expose the switch to excessive shock and vibration, otherwise the switch may be deformed or damaged, causing malfunction or operation failure.

[Protection Example 1] For AC circuit

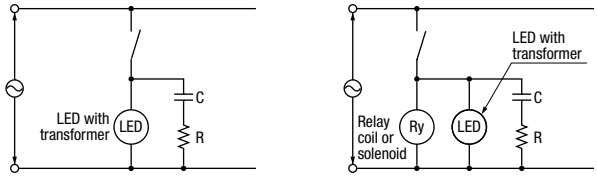

[Protection Example 2] For DC circuit

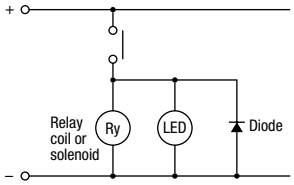

Countermeasures against Dim Lighting

1. Leakage current through transistors or a contact protection circuit may cause the LED lamp to illuminate dimly even when the output is off.
2. When the LED lamp is illuminated by a transistor output, take the following measure.

[Circuit Example]

Connect shunt resistor R in parallel with the LED lamp.

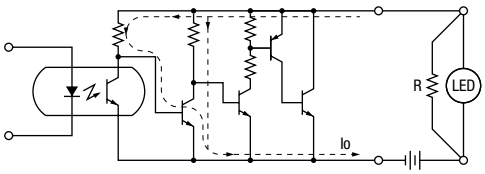

Io: Leakage current when the output is off
R: Shunt resistor

Ordering Information

- When ordering, specify the Part No. and quantity.
- Replacement contact blocks are supplied in a package containing 10 pieces.

Ordering Terms and Conditions

Thank you for using IDEC Products.

By purchasing products listed in our catalogs, datasheets, and the like (hereinafter referred to as "Catalogs") you agree to be bound by these terms and conditions. Please read and agree to the terms and conditions before placing your order.

1. Notes on contents of Catalogs

(1) Rated values, performance values, and specification values of IDEC products listed in this Catalog are values acquired under respective conditions in independent testing, and do not guarantee values gained in combined conditions.
Also, durability varies depending on the usage environment and usage conditions.

(2) Reference data and reference values listed in Catalogs are for reference purposes only, and do not guarantee that the product will always operate appropriately in that range.

(3) The specifications / appearance and accessories of IDEC products listed in Catalogs are subject to change or termination of sales without notice, for improvement or other reasons.

(4) The content of Catalogs is subject to change without notice.

2. Note on applications

(1) If using IDEC products in combination with other products, confirm the applicable laws / regulations and standards.
Also, confirm that IDEC products are compatible with your systems, machines, devices, and the like by using under the actual conditions. IDEC shall bear no liability whatsoever regarding the compatibility with IDEC products.

(2) The usage examples and application examples listed in Catalogs are for reference purposes only. Therefore, when introducing a product, confirm the performance and safety of the instruments, devices, and the like before use. Furthermore, regarding these examples, IDEC does not grant license to use IDEC products to you, and IDEC offers no warranties regarding the ownership of intellectual property rights or non-infringement upon the intellectual property rights of third parties.

(3) When using IDEC products, be cautious when implementing the following.

i. Use of IDEC products with sufficient allowance for rating and performance

ii. Safety design, including redundant design and malfunction prevention design that prevents other danger and damage even in the event that an IDEC product fails

iii. Wiring and installation that ensures the IDEC product used in your system, machine, device, or the like can perform and function according to its specifications

(4) Continuing to use an IDEC product even after the performance has deteriorated can result in abnormal heat, smoke, fires, and the like due to insulation deterioration or the like. Perform periodic maintenance for IDEC products and the systems, machines, devices, and the like in which they are used.

(5) IDEC products are developed and manufactured as general-purpose products for general industrial products. They are not intended for use in the following applications, and in the event that you use an IDEC product for these applications, unless otherwise agreed upon between you and IDEC, IDEC shall provide no guarantees whatsoever regarding IDEC products.

i. Use in applications that require a high degree of safety, including nuclear power control equipment, transportation equipment (railroads / airplanes / ships / vehicles / vehicle instruments, etc.), equipment for use in outer space, elevating equipment, medical instruments, safety devices, or any other equipment, instruments, or the like that could endanger life or human health

ii. Use in applications that require a high degree of reliability, such as provision systems for gas / waterworks / electricity, etc., systems that operate continuously for 24 hours, and settlement systems

iii. Use in applications where the product may be handled or used deviating from the specifications or conditions / environment listed in the Catalogs, such as equipment used outdoors or applications in environments subject to chemical pollution or electromagnetic interference
If you would like to use IDEC products in the above applications, be sure to consult with an IDEC sales representative.

3. Inspections

We ask that you implement inspections for IDEC products you purchase without delay, as well as thoroughly keep in mind management/maintenance regarding handling of the product before and during the inspection.

4. Warranty

(1) Warranty period

The warranty period for IDEC products shall be one (1) year after purchase or delivery to the specified location. However, this shall not apply in cases where there is a different specification in the Catalogs or there is another agreement in place between you and IDEC.

(2) Warranty scope

Should a failure occur in an IDEC product during the above warranty period for reasons attributable to IDEC, then IDEC shall replace or repair that product, free of charge, at the purchase location / delivery location of the product, or an IDEC service base. However, failures caused by the following reasons shall be deemed outside the scope of this warranty.

i. The product was handled or used deviating from the conditions / environment listed in the Catalogs

ii. The failure was caused by reasons other than an IDEC product

iii. Modification or repair was performed by a party other than IDEC

iv. The failure was caused by a software program of a party other than IDEC

v. The product was used outside of its original purpose

vi. Replacement of maintenance parts, installation of accessories, or the like was not performed properly in accordance with the user's manual and Catalogs

vii. The failure could not have been predicted with the scientific and technical standards at the time when the product was shipped from IDEC

viii. The failure was due to other causes not attributable to IDEC (including cases of force majeure such as natural disasters and other disasters)

Furthermore, the warranty described here refers to a warranty on the IDEC product as a unit, and damages induced by the failure of an IDEC product are excluded from this warranty.

5. Limitation of liability

The warranty listed in this Agreement is the full and complete warranty for IDEC products, and IDEC shall bear no liability whatsoever regarding special damages, indirect damages, incidental damages, or passive damages that occurred due to an IDEC product.

6. Service scope

The prices of IDEC products do not include the cost of services, such as dispatching technicians. Therefore, separate fees are required in the following cases.

(1) Instructions for installation / adjustment and accompaniment at test operation (including creating application software and testing operation, etc.)

(2) Maintenance inspections, adjustments, and repairs

(3) Technical instructions and technical training

(4) Product tests or inspections specified by you

The above content assumes transactions and usage within your region. Please consult with an IDEC sales representative regarding transactions and usage outside of your region. Also, IDEC provides no guarantees whatsoever regarding IDEC products sold outside your region.

IDEC CORPORATION

www.idec.com

Head Office
6-64, Nishi-Miyahara-2-Chome, Yodogawa-ku, Osaka 532-0004, Japan

USA	IDEC Corporation	Tel: +1-408-747-0550	opencontact@idec.com	**Hong Kong**	IDEC Izumi (H.K.) Co., Ltd.	Tel: +852-2803-8989	info@hk.idec.com
Germany	APEM GmbH	Tel: +49-40-25 30 54-0	service@eu.idec.com	**China**	IDEC (Shanghai) Corporation	Tel: +86-21-6135-1515	idec@cn.idec.com
Singapore	IDEC Izumi Asia Pte. Ltd.	Tel: +65-6746-1155	info@sg.idec.com		Beijing Branch	Tel: +86-10-6581-6131	idec@cn.idec.com
Thailand	IDEC Asia (Thailand) Co., Ltd	Tel: +66-2-392-9765	sales@th.idec.com		Guangzhou Branch	Tel: +86-20-8362-2394	idec@cn.idec.com
India	IDEC Controls India Private Limited	Tel: +91-80679-35328	info_india@idec.com	**Japan**	IDEC Corporation	Tel: +81-6-6398-2527	jp_marketing@idec.com
Taiwan	IDEC Taiwan Corporation	Tel: +886-2-2577-6938	service@tw.idec.com				

Specifications and other descriptions in this brochure are subject to change without notice.

Điện City
Connect & Innovate

CÔNG TY TNHH THƯƠNG MẠI KỸ THUẬT ĐIỆN CITY

Nhà phân phối thiết bị điện công nghiệp hàng đầu Việt Nam

TOGI KAKU® INOVANCE IDEC
Think Automation and beyond...

Fuji Electric
Innovating Energy Technology

MITSUBISHI ELECTRIC
Changes for the Better

TAIWAN METERS

LIÊN HỆ VỚI CHÚNG TÔI

Địa chỉ: 125 Phú Châu, KP1, P. Tam Bình, TP. Thủ Đức, TP. HCM
Hotline: 0909 808 905 (Zalo)
Email: minh.diencity@gmail.com
Website: diencity.com