Stainless Steel Ball Check Valve - Screwed BSPP

Screwed BSPP, 316 Stainless Steel Body & Cover

Pressure / Temperature Specifications	
Pressure	PN16
Temperature	-10°C to 220°C

Material Specifications	
1. Body	CF8M 316 Stainless Steel
2. Bonnet	CF8M 316 Stainless Steel
3. Ball	Aluminium & Viton
4. Bonnet Gasket	Viton
5. Bolts	A4 Stainless Steel
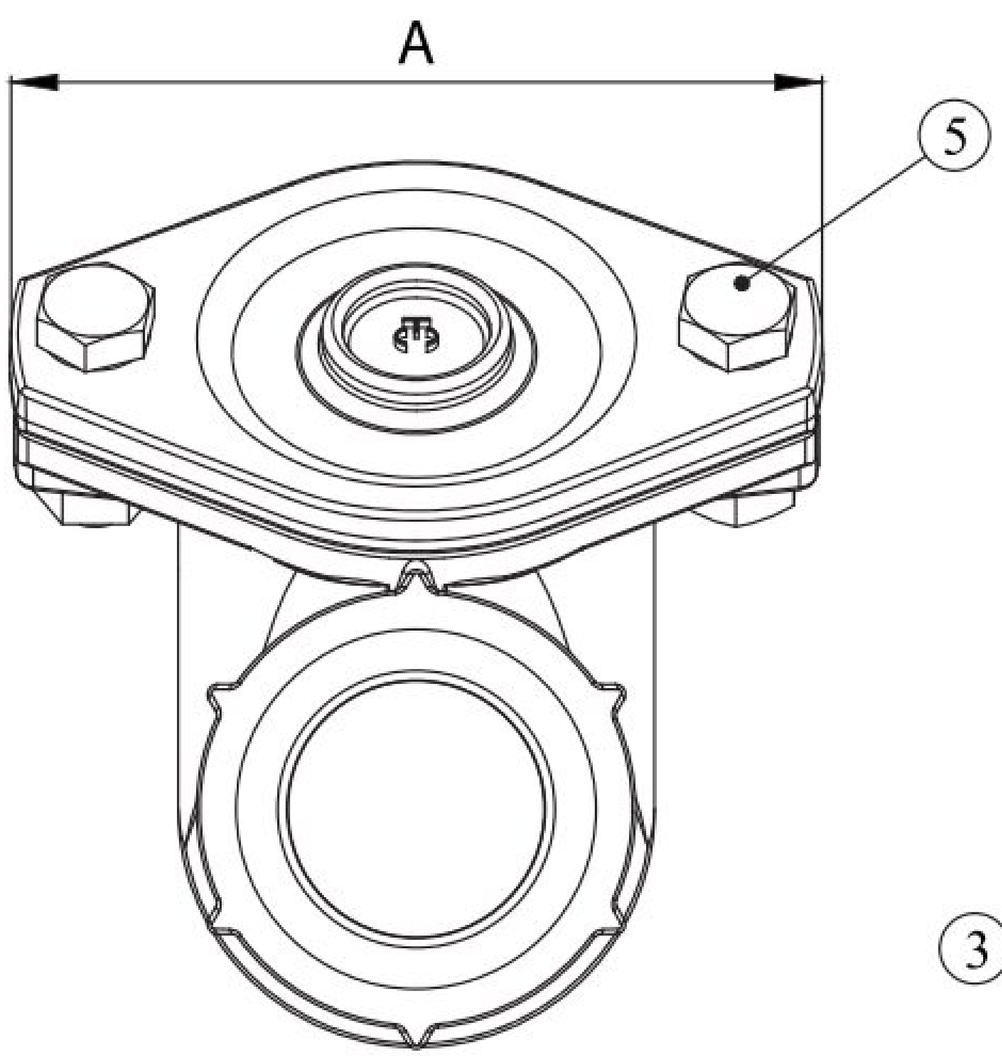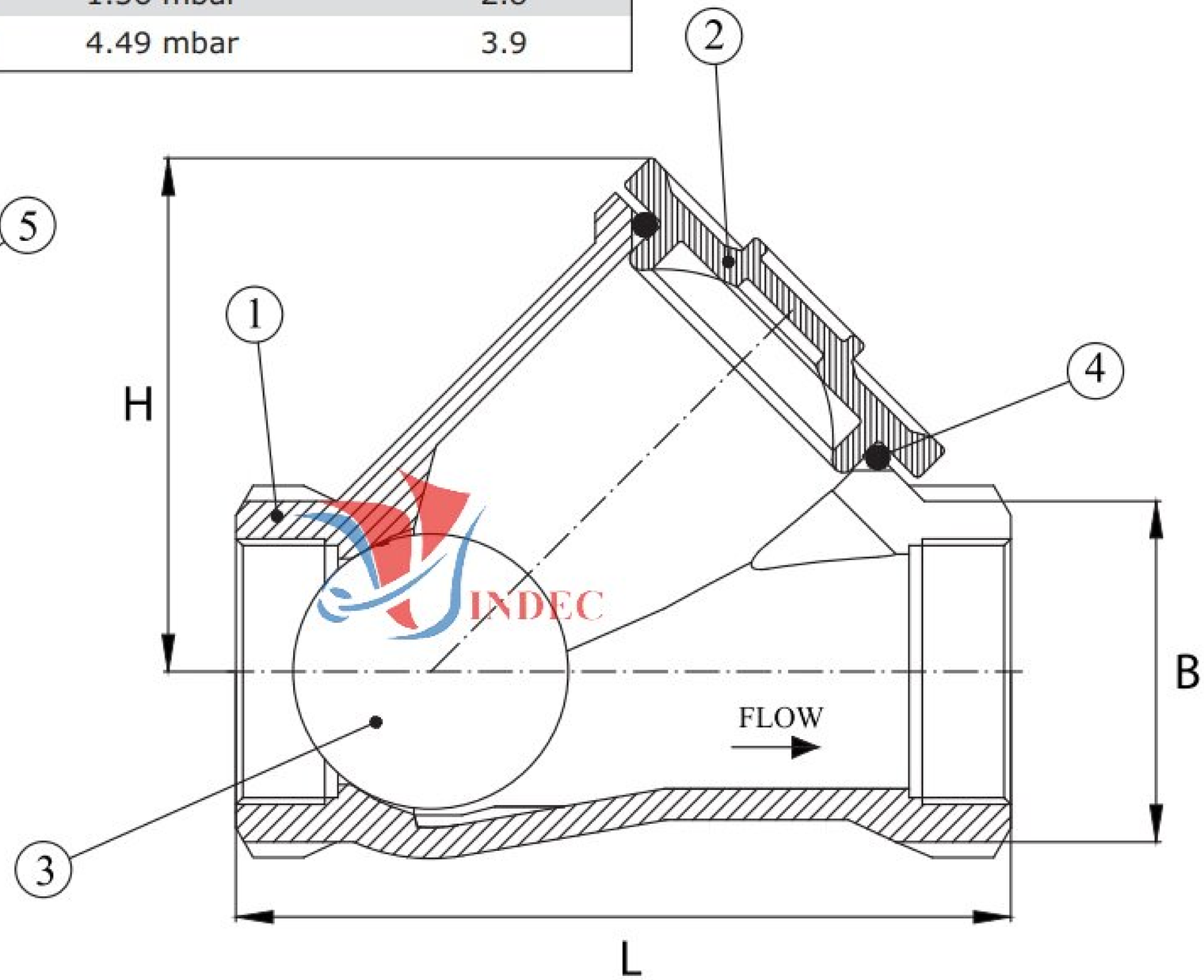
Dimensions							
Size	A	B	H	L	Kv	Cracking Pressure	Kg
1″	110	57	85	141	21	2.35 mbar	2.2
1¼″	110	57	85	141	29	1.43 mbar	2.2
1½″	120	64	90	150	57	1.56 mbar	2.8
2″	140	77	115	175	78	4.49 mbar	3.9