10K BRONZE BALL VALVE

Bolted body cap, Full bore
Fringed ends to JIS B2240 10K

W.O.G. non-shock 1.37 MPa (14kgf/cm²), W.O.G. 150˚C 0.68 MPa (7kgf/cm²)

Fig. TB

• Flanged ends to JIS 10K

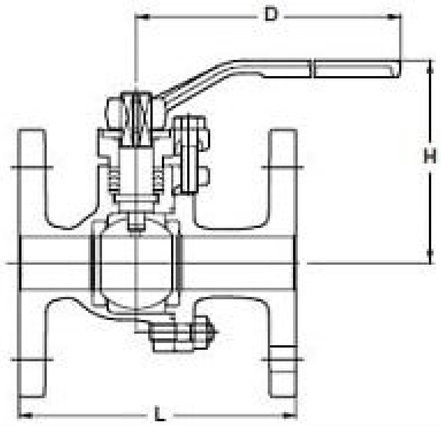

Materials

Parts	Material
Body	Bronze
Body cap	Bronze
Stem	Dezincification Resistant Brass
Ball	Brass**/ Stainless Steel*
Ball seat	PTFE
Grand packing	PTFE

*Size 4 only
**Chrome or Nickel-chrome plated

Dimensions

mm

Nominal Size	Inch	1/2	3/4	1	1 1/4	1 1/2	2	2 1/2	3	4
	mm	15	20	25	32	40	50	65	80	100
L Threaded end to end		110	120	130	140	165	180	190	200	230
H Height		85	88	95	100	115	122	153	162	190
D Length of Handle		130	130	160	160	230	230	400	400	460